TI Designs

230-V, 400-W High Efficiency Battery Charger With PFC and LLC for 36-V Power Tools

TI Designs

TI Designs provide the foundation that you need including methodology, testing and design files to quickly evaluate and customize the system. TI Designs help *you* accelerate your time to market.

Design Resources

TIDA-00355	Design Folder
UCC28180	Product Folder
UCC25600	Product Folder
UCC27714	Product Folder
UCC28722	Product Folder
TLV70450	Product Folder

TI E2E™ Community

ASK Our E2E Experts
WEBENCH® Calculator Tools

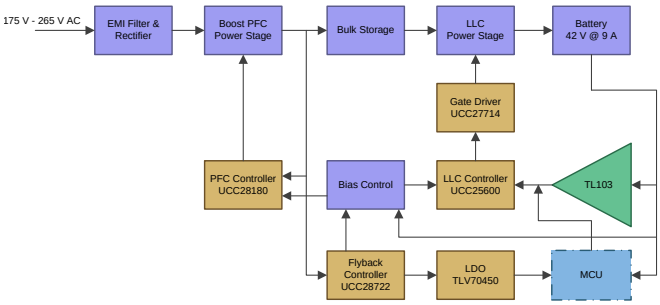

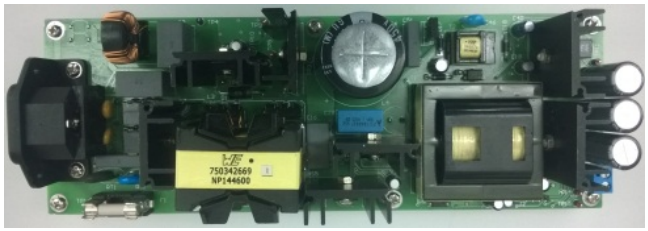

Design Features

- 400-W Battery Charger With Front-End PFC and Half-Bridge LLC Resonant Converter
- Designed to Charge Wide Range of Batteries in the Voltage Range of 20 to 42 V:
  - Li-Ion, Li-Poly, Ni-Cd and Lead-Acid
- Ideal Charger for 10-Cell Li-ion Battery Pack Used in Industrial Power Tools
- Delivers up to 9 A of Continuous Charging Current for Fast Charging of Batteries
- Overall Efficiency of 92% at Full Charging Current of 9 A and 230-V Input, Eliminating the Need for External Cooling
- High Power Factor > 0.99 and Meets PFC Regulations and Current THD as per IEC 61000-3-2 Class A
- Very Low Standby Power of < 200 mW When Battery is Not Connected
- Small PCB Form Factor of 230 × 80 mm Offers Portability in Usage
- Provides Flexibility for Charge Profiling Through an Additional External Microcontroller
- Charger is Protected for Overcurrent and Short Circuit at Output Terminals Ensuring Safety Needs
- Meets the Requirements of Conducted Emissions Standard – EN55011 Class A

Featured Applications

- Cordless Power Tools
- Cordless Garden Tools
- Battery Chargers for
  - Vacuum Cleaner
  - Robotic Mower
  - E-Bike, E-Cycle

An IMPORTANT NOTICE at the end of this TI reference design addresses authorized use, intellectual property matters and other important disclaimers and information.

All trademarks are the property of their respective owners.

Copyright © 2015, Texas Instruments Incorporated

1 Introduction

Power tools are used in various industrial and household applications such as drilling, grinding, cutting, polishing, driving fasteners, various garden tools, and so on. The most common types of power tools use electric motors while some use internal combustion engines, steam engines, or compressed air.

Power tools can be either corded or cordless (battery-powered). Corded power tools use the mains power (the grid power) to power up the AC or DC motors. The cordless tools use battery power to drive DC motors. Most of the cordless tools use lithium-ion batteries, the most advanced in the industry. Lithium-ion batteries have high energy density, low weight, and greater life. These batteries have relatively low self-discharge (less than half that of nickel-based batteries) and can provide a very high current for applications like power tools. Cordless tools use brushed or BLDC motors. The brushless motors are more efficient and have less maintenance, low noise, and longer life.

This reference design is a complete battery charger for charging batteries used in battery-powered garden and power tools rated up to 400 W. The design can be used to charge Li-ion and Li-poly chemistry batteries with a voltage range from 36 to 42 V and maximum charging current of 9 A. The charger provides constant voltage and constant current controls with settable configuration as per charging requirements.

Power tool chargers have requirements of high efficiency at maximum charging current and low standby requirements when battery is not connected. This design demonstrates the high performance charging power stage in a small form factor (230 × 80 mm), operating from 175-V to 265-V AC and delivers up to 9-A continuous current output to charge battery at greater than 90% efficiency. The design meets low standby power of < 200 mW when battery is not connected. The design also provides flexibility for battery voltage and current level setting for charge profiling, through an additional external microcontroller.

2 Key System Specifications

Table 1. Key System Specifications

PARAMETER	SPECIFICATION
Input voltage range	175-V to 265-V AC
Output voltage	42 V ±2%, 0- to 9-A output current
Output current	9 A ±5%, 20- to 42-V output voltage
Board form factor	230 × 80 mm
Expected efficiency	> 90% at 230 V and full load
Standby power	< 500 mW at 230 V without battery connected on output
Power line harmonics	As per IEC61000-3-2
Conducted emissions	As per EN55022 Class A
Auxiliary power for MCU	5 V at 100 mA
Output voltage ripple	±1 V
Output current ripple	±0.5 A

Copyright © 2015, Texas Instruments Incorporated

3 System Description

The design is a 42-V, 400-W battery charger power supply with boost PFC pre-regulator using UCC28180 as PFC controller and the main converter stage is realized using LLC configuration with UCC25600 as LLC controller and UCC27714 as gate driver. Internal auxiliary power supply for biasing controllers is implemented using simple low cost flyback controller UCC28722. The system design is done to meet high efficiency, low EMI, and low standby power consumption specifications.

The charger is designed for input voltage range of 175-V to 265-V AC and used to charge batteries up to 36 V at maximum current of 9 A. The design form factor (230 × 80 mm) is compact for the power level of 400 W. The design has an operating efficiency of around 92% at full load, with voltage and current regulation within ±3%.

The EMI filter at the front end of the circuit is designed to meet EN55022 Class-A conducted emission levels. This is followed by an active boost PFC stage operating in continuous conduction mode (CCM). This PFC stage regulates the DC bus voltage to 400 V, stabilized against line drop-outs with a bulk storage capacitor. The isolated power stage of the charger is an LLC-resonant converter operating very close to resonant frequency at full load. The operation will move to above resonance with lighter loads in both constant voltage and constant current regions of the charger. The constant current/constant voltage (CV/CC) feedback is achieved using the TL103W, which has an integrated dual op-amp and a 2.5-V reference. The system is designed to meet below 200 mW of standby power when no battery is connected. This goal is achieved by using a simple logic circuit that disables PFC and LLC power stages when battery is not present.

The ultra-low-cost flyback bias power supply is built using UCC28722 with a BJT as the switching element, resulting in very minimal cost impact. This bias power supply also provides the power needed for an external MCU, which can be optionally added as an add-on card to control the charging profile more precisely.

Various parameters of the design like regulation, efficiency, EMI signature, output ripple, startup, and switching stresses were tested and documented.

Copyright © 2015, Texas Instruments Incorporated

4 Block Diagram

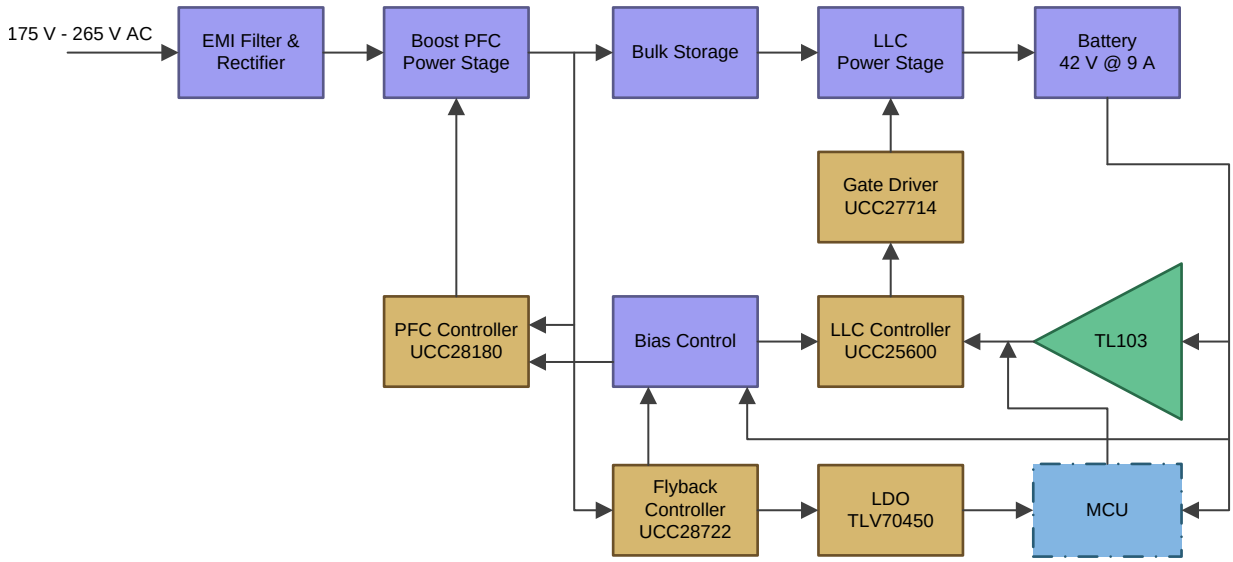

Figure 1. Block Diagram of 400-W Power Supply With PFC and LLC

4.1 Highlighted Products and Key Benefits for 400-W Charger

The following are the highlighted products used in this reference design. Key features for selecting the devices for this reference design are elucidated in the following sections. Complete details of the highlighted devices can be referred in respective product datasheets.

4.1.1 UCC28180 – PFC Controller

To implement the high performance, small form factor PFC design at 400-W power, the UCC28180 is preferred controller as it offers series of benefits to address the next generation needs of low THD norms for power tools.

The UCC28180 is an extremely high performance, CCM compact, 8-pin programmable frequency PFC controller. Its wide and programmable operating frequency provides flexibility to design at a high frequency optimizing the components. Its trimmed current loop circuits helps achieve less than 5% THD from medium-to-full load (50 to 100%). Its reduced current sense threshold helps utilize a 50% smaller shunt resistor, resulting in lower power dissipation while maintaining low THD. Its integrated fast gate driver of 2-A/1.5-A drive current eliminates the need for an external gate driver.

The UCC28180 also has a complete set of system protection features such as soft overcurrent, cycle-by-cycle current limit, output overvoltage protection, VCC UVLO, and open pin protections (ISENSE, VSENSE). These features greatly improve reliability and further simplifies the design.

Copyright © 2015, Texas Instruments Incorporated

4.1.2 UCC25600 — LLC Controller

Power tool designs demand high frequency DC/DC conversion and high efficiency with small form-factor. The UCC25600 LLC controller is best fit for high wattage resonant power design as it offers all the key advantages for high performance and high efficiency DC/DC conversion at high power levels.

The UCC25600 is a simple 8-pin resonant mode controller designed for offline DC/DC applications. The UCC25600 controller works in the LLC resonant half bridge topology and operates with zero voltage switching (ZVS) to provide highly efficient voltage conversion operation, which nearly eliminates all switching losses. This controller uses frequency modulation control has programmable dead-time control with a precision 50-ns set point accuracy and tight tolerances on the frequency, which reduces the need for over-design saving system cost. The UCC25600 also has as complete set of system protection features such as overcurrent, over temperature and bias voltage OVP and UVLO, which greatly improves reliability and further simplifies the design. Its unique programmable independent minimum and maximum switching frequency settings prevents ZCS region operation and limits switching loss at light load condition. Its integrated burst mode operation helps maintain regulation at light load and no load conditions.

4.1.3 UCC27714 — Gate Driver

LLC converter implementation needs driving of two MOSFETs operated in half bridge configuration. The UCC27714 offers all the key features as needed for half-bridge LLC implementation. Its high operating voltage range up to 600 V, and 4-A driving currents helps in simple implementation of LLC half-bridge driver circuitry. Its best-in-class propagation delay (90 ns typ.) and delay matching (20 ns max.) between channel helps in minimizing pulse distortion in high frequency LLC applications.

4.1.4 UCC28722 — Flyback Controller

To achieve very low power consumption and optimize board space for the auxiliary power supply needs, the UCC28722 meets the bias supply needs. The main value of the UCC28722 solution is reduced total cost. The design offers advantage of elimination of feedback components and its increasing switching frequency and increasing the VDD range aids in the reduction in size of power stage components. In addition, this solution allows to easily meet <50-mW standby power at the lowest system solution cost.

Copyright © 2015, Texas Instruments Incorporated

5 System Design Theory

This reference design provides 400 W of power from a 230-V AC input with power factor correction. This design is intended for operation at country specific line voltages between 175-V to 265-V AC. The UCC28180 controls a PFC boost front end, while the UCC25600 LLC-resonant half-bridge converts the PFC output to isolated 42 V and 9 A. The total system efficiency is 92% with a 230-V AC input and over 90% with a 175-V AC input with full load. In addition, several protections are embedded into this design which includes input under-voltage protection and output short circuit protection.

Low EMI, high efficiency, high power factor, and a reliable power supply are the main focuses of this design for targeted applications.

5.1 PFC Regulator Stage Design

Power factor correction shapes the input current of the power supply to maximize the real power available from the mains. In addition, it is important to have PFC to comply with low harmonic (low THD) regulatory requirements such as IEC61000-3-2. Currently, two modes of operation have been widely utilized for PFC implementations. For higher power circuits, the topology of choice is the boost converter operating in CCM and with average current mode control. For lower power applications, typically the critical conduction mode (CrCM) boost topology is used.

For high power levels such as 400 W, it is advisable to use CCM operation as it has lower peak and RMS currents. Lower currents significantly reduce the stress in power MOSFET, diode, and inductor. In addition, the filtering is easier as the current through the boost inductor is more continuous. Finally, the switching frequency remains constant for the CCM operation, so the boost inductor design and EMI filter designs are easier.

The UCC28180 operates at fixed frequency in CCM and requires minimal external components for high wattage PFC pre-regulator implementation. The design process and component selection for this design are illustrated below. All design calculations are available in the Excel® file "TIDA00355_PFC.xls" available at http://www.ti.com/tool/TIDA-00355.

5.1.1 Circuit Component Design

5.1.1.1 Design Parameters

Table 2. Design Parameters for PFC Power Stage Design

PARAMETER		MIN	TYP	MAX	UNIT
INPUT					
V_{IN}	Input voltage	175		265	V AC
f_{LINE}	Input frequency	47		63	Hz
OUTPUT					
V_{OUT}	Output voltage		397		V DC
P_{OUT}	Output power			400	W
	Line regulation			5%	
	Load regulation			5%	
PF	Targeted power factor		0.99		
η	Targeted efficiency		96%		

Copyright © 2015, Texas Instruments Incorporated

5.1.1.2 Current Calculations

The input fuse, bridge rectifier, and input capacitor are selected based upon the input current calculations. First, determine the maximum average output current, $I_{OUT(max)}$:

$$I_{OUT(max)} = \frac{P_{OUT(max)}}{V_{OUT}}$$

$$I_{OUT(max)} = \frac{400}{397} = 1.0\,A \tag{1}$$

The maximum input RMS line current, $I_{IN_RMS(max)}$, is calculated using the parameters from Table 2 and the efficiency and power factor initial assumptions:

$$I_{IN_RMS(max)} = \frac{P_{OUT(max)}}{\eta \times V_{IN(min)} \times PF}$$

$$I_{IN_RMS(max)} = \frac{400}{0.96 \times 175 \times 0.99} = 2.41\,A \tag{2}$$

$$I_{RIPPLE} = \Delta I_{RIPPLE} \times I_{IN(max)}$$

$$I_{RIPPLE} = 0.3 \times (\sqrt{2} \times 2.41) = 1.02\,A \tag{3}$$

Assuming ripple to be 1.5%,

$$V_{IN_RIPPLE} = \Delta V_{RIPPLE_IN} \times V_{IN_RECTIFIED(min)}$$

$$V_{IN_RIPPLE} = 0.015 \times \left(\sqrt{2} \times 175\right) = 3.71\,V \tag{4}$$

The recommended value for the input X-capacitor can now be calculated:

$$C_{IN} = \frac{I_{RIPPLE}}{8 \times f_{sw} \times V_{IN_RIPPLE}}$$

$$C_{IN} = \frac{1.02}{8 \times 98 \times 7.43} = 0.360\,\mu F \tag{5}$$

A standard value 0.47-µF X2 film capacitor is used.

5.1.1.3 Boost Inductor

The duty cycle of operation is a function of the rectified input voltage and will be continuously changing over the half-line cycle. The duty cycle, $DUTY_{(max)}$, can be calculated at the peak of the minimum input voltage:

$$DUTY_{(max)} = \frac{V_{OUT} - V_{IN_RECTIFIED(min)}}{V_{OUT}}$$

$$DUTY_{(max)} = \frac{397 - (1.414 \times 175)}{397} = 0.377 \tag{6}$$

The minimum value of the boost inductor is calculated based upon the acceptable ripple current, I_{RIPPLE}, at a worst case duty cycle of 0.377:

$$L_{BST(min)} \geq \frac{V_{OUT} \times D \times (1 - D)}{f_{sw} \times I_{RIPPLE}}$$

$$L_{BST(min)} \geq \frac{397 \times 0.377 \times (1 - 0.377)}{(98 \times 1.02)} = 932\,\mu H \tag{7}$$

The actual value of the boost inductor used is 1000 µH.

Copyright © 2015, Texas Instruments Incorporated

5.1.1.4 Output Capacitor

The output capacitor, C_{OUT}, is sized to meet holdup requirements of the converter. Assuming the downstream converters require the output of the PFC stage to never fall below 280 V, $V_{OUT_HOLDUP(min)}$, during one line cycle, $t_{HOLDUP} = 1/f_{LINE(min)}$, the minimum calculated value for the capacitor is:

$$C_{OUT(min)} \geq \frac{2 \times P_{OUT(max)} \times t_{HOLDUP}}{V_{OUT}^2 - V_{OUT_HOLDUP(min)}^2}$$

$$C_{OUT(min)} \geq \frac{2 \times 400 \times 20\ \text{ms}}{(397^2 - 280^2)} = 202\ \mu\text{F} \tag{8}$$

The capacitor of 220 µF is selected, considering the capacitor tolerances.

5.1.1.5 Switching Element

The drain to source RMS current, I_{DS_RMS} through switching FET is calculated as

$$I_{DS_RMS} = \frac{P_{OUT(max)}}{V_{IN_RECTIFIED(min)}} \times \sqrt{2 - \frac{16 \times V_{IN_RECTIFIED(min)}}{3 \times \pi \times V_{OUT}}}$$

$$I_{DS_RMS} = \frac{400}{247} \times \sqrt{2 - \left(\frac{16 \times 247}{3 \times \pi \times 397}\right)} = 1.57\ \text{A} \tag{9}$$

An AOTF12T50P MOSFET of 500 V/12 A is selected for the current design. Consider using a higher voltage rating FET (600 V/650 V) based on the design de-rating needs of the end equipment.

The conduction losses of the switch MOSFET in this design are estimated using the $R_{DS(on)}$ at 100°C, found in the device datasheet, and the calculated drain to source RMS current, I_{DS_RMS}:

$$P_{COND} = I_{DS_RMS}^2 \times R_{DS(on)}$$

$$P_{COND} = 1.568^2 \times (0.7) = 1.73\ \text{W} \tag{10}$$

The switching losses are estimated using the rise time, t_r, and fall time, t_f, of the MOSFET gate, and the output capacitance losses (C_{OSS}).

$$P_{SW} = f_{SW}\left[0.5 \times V_{OUT} \times I_{IN(max)} \times (t_r + t_f) + 0.5 \times C_{OSS} \times V_{OUT}^2\right]$$

$$P_{SW} = 98 \times \left[0.5 \times 397 \times 3.4 \times (12\ \text{ns} + 6\ \text{ns}) + 0.5 \times 68\ \text{pF} \times 397^2\right] = 1.71\ \text{W} \tag{11}$$

Total FET losses:

$$P_{COND} + P_{SW} = 1.73 + 1.71 = 3.44\ \text{W} \tag{12}$$

An appropriately sized heat sink is used for MOSFET.

5.1.1.6 Boost Diode

The output diode should have a blocking voltage that exceeds the output over voltage of the converter and average current same as $I_{OUT(max)}$. BYV25FX-600, a 600-V/5-A diode, is selected as output diode.

The diode losses are estimated based upon the forward voltage drop, V_F, at 125°C and the reverse recovery charge, Q_{RR}, of the diode:

$$P_{DIODE} = V_{F_125C} \times I_{OUT(max)} + 0.5 \times f_{SW} \times V_{OUT} \times Q_{RR}$$

$$P_{DIODE} = 1.5 \times 1.0 + 0.5 \times 98 \times 397 \times 13\ \text{nC} = 1.75\ \text{W} \tag{13}$$

Copyright © 2015, Texas Instruments Incorporated

5.1.1.7 Sense Resistor

To accommodate the gain of the non-linear power limit, the sense resistor, R_{SENSE}, is sized such that it triggers the soft overcurrent at 10% higher than the maximum peak inductor current using the minimum soft over current threshold of the ISENSE pin, V_{SOC}, of ISENSE equal to 0.265 V.

$$R_{SENSE} = \frac{V_{SOC(min)}}{I_{L_PEAK(max)} \times 1.1}$$

$$R_{SENSE} = \frac{0.259\ V}{3.91\ A \times 1.1} = 0.06\ \Omega \tag{14}$$

R_{SENSE} selected is 0.05 Ω.

The power dissipated across the sense resistor, P_{RSENSE}, must be calculated:

$$P_{RSENSE} = I^2_{IN_RMS(max)} \times R_{SENSE}$$

$$P_{RSENSE} = 2.41^2 \times 0.05 = 0.29\,W \tag{15}$$

The peak current limit, PCL, protection feature is triggered when current through the sense resistor results in the voltage across R_{SENSE} to be equal to the V_{PCL} threshold. For a worst case analysis, the maximum V_{PCL} threshold is used:

$$I_{PCL} = \frac{V_{PCL(max)}}{R_{SENSE}}$$

$$I_{PCL} = \frac{0.438\,V}{0.05} = 8.76\,A \tag{16}$$

To protect the ISENSE pin from inrush-surge current, a 220-Ω resistor, R_{ISENSE}, is placed in series with the ISENSE pin. A 1000-pF capacitor is placed close to the device to improve noise immunity on the ISENSE pin.

Copyright © 2015, Texas Instruments Incorporated

5.1.1.8 Output Voltage Set Point

For low power dissipation and minimal contribution to the voltage set point, 9.96 MΩ is used for the top voltage feedback divider resistor, R_{FB1}. Multiple resistors in series are used due to the maximum allowable voltage across each. Using the internal 5-V reference, V_{REF}, the bottom divider resistor, R_{FB2}, is selected to meet the output voltage design goals.

$$R_{FB2} = \frac{V_{REF} \times R_{FB1}}{V_{OUT} - V_{REF}}$$

$$R_{FB2} = \frac{5\,V \times 9.96\ M\Omega}{397\,V - 5\,V} = 127\ k\Omega \tag{17}$$

An output overvoltage is detected when the output voltage exceeds its nominal set-point level by 5%, as measured when the voltage at VSENSE is 105% of the reference voltage, V_{REF}.

$$V_{OUT(ovd)} = V_{OVD} \times \left(\frac{R_{FB1} + R_{FB2}}{R_{FB2}}\right)$$

$$V_{OUT(ovd)} = (1.05 \times 5) \times \frac{9.96\ M\Omega + 127\ k\Omega}{127\ k\Omega} = 417\,V \tag{18}$$

An output undervoltage is detected when the output voltage falls below 5% below its nominal set-point as measured when the voltage at VSENSE is 95% of the reference voltage, V_{REF}:

$$V_{OUT(uvp)} = V_{UVD} \times \left(\frac{R_{FB1} + R_{FB2}}{R_{FB2}}\right)$$

$$V_{OUT(uvp)} = (0.95 \times 5) \times \frac{9.96\ M\Omega + 127\ k\Omega}{127\ \Omega} = 377.3\ V \tag{19}$$

Add a small capacitor on VSENSE to filter out noise. Limit the value of the filter capacitor such that the RC time constant is limited to approximately 10 µs so as not to significantly reduce the control response time to output voltage deviations.

$$C_{VSENSE} = \frac{10\,\mu s}{R_{FB2}} = 82\ pF \tag{20}$$

5.1.1.9 Control Loop Compensation

The voltage error amplifier is compensated with a zero, f_{ZERO}, at the f_{PWM_PS} pole and a pole, f_{POLE}, placed at 20 Hz to reject high frequency noise and roll off the gain amplitude. The overall voltage loop crossover, f_V, is desired to be at 10 Hz. The compensation components of the voltage error amplifier are selected accordingly.

Copyright © 2015, Texas Instruments Incorporated

5.2 LLC Converter Stage Design

Increased demands for high power density power supplies have resulted in the increase in switching frequency of the converters designed. While component sizes tend to decrease with an increase in the switching frequency, device switching losses (which are proportional to frequency) have significantly increased contributing significant efficiency loss. Resonant converters use soft-switching techniques to alleviate switching loss problems and attain high efficiencies. Furthermore, soft-switching helps attain low losses during light load conditions, very low device stress, and reduced EMI.

The three main classes of resonant converters are series resonant converter (SRC), parallel resonant converter (PRC) and a combination of the two, the series-parallel resonant converter (SPRC). Among these the simplest and most popular resonant converter is the LLC series resonant converter.

The LLC resonant converter is based on the SRC. By using the transformer magnetizing inductor, zero-voltage switching can be achieved over a wide range of input voltage and load. As a result of multiple resonances, zero-voltage switching can be maintained even when the switching frequency is higher or lower than the resonant frequency. The converter achieves the best efficiency when operated close to its resonant frequency at a nominal input voltage. As the switching frequency is lowered, the voltage gain is significantly increased. This allows the converter to maintain regulation when the input voltage falls low. These features make the converter ideally suited to operate from the output of a high-voltage boost PFC pre-regulator, allowing it to hold up through brief periods of ac line-voltage dropout.

The UCC25600 is low-pin count and low cost LLC controller and requires minimal components to deliver optimum system performance. In addition, controller delivers complete system protection functions including overcurrent, UVLO, bias supply OVP and over temperature protection. The design process and component selection for this design are illustrated below. All design calculations are available in the Excel file "TIDA00355_LLC.xlsx" available at http://www.ti.com/tool/TIDA-00355.

5.2.1 Design Parameters

Table 3. Design Parameters for LLC Power Stage Design

PARAMETER		MIN	TYP	MAX	UNIT
INPUT					
V_{INDC}	Input voltage	375	397	410	V DC
OUTPUT					
V_{OUT}	Output voltage		42		V DC
P_{LIMIT}	Output power limit			400	W
P_{OUT}	Max output power		390		W
f_{swnom}	Nominal switching frequency		98.5		kHz
	Line regulation		1		%
	Load regulation		1		%
PF	Targeted power factor		0.99		
η	Targeted efficiency		0.95		

Copyright © 2015, Texas Instruments Incorporated

5.2.2 Design Steps

5.2.2.1 Flow Chart for LLC Resonant-Network Design

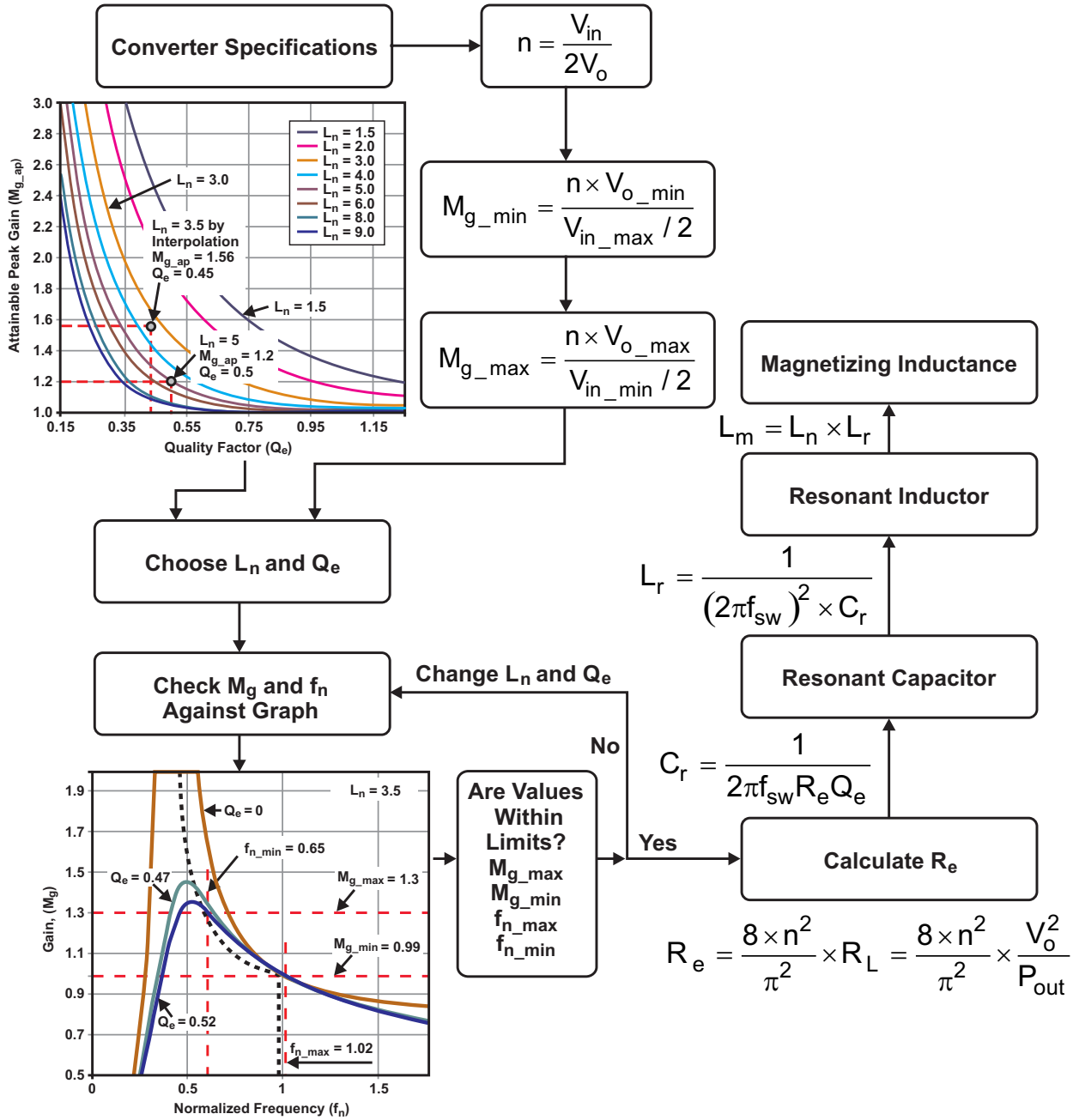

Figure 2. Flow Chart for LLC Resonant-Network Design

Copyright © 2015, Texas Instruments Incorporated

5.2.2.2 Determine Transformer Turns Ratio (n)

The transformer turns ratio is determined by Equation 21:

$$n = M_g \times \frac{V_{DCIN_NOM} / 2}{V_O} : M_g = 1 \tag{21}$$

Where Mg is the voltage gain.

From the specifications, the nominal values for input voltage and output voltage are 397 V and 42 V, respectively, so the turns-ratio can be calculated as

$$n = \frac{\left(V_{DCIN_NOM} / 2\right)}{V_O} = \frac{(397 / 2)}{42} = 4.72 \Rightarrow 5 \tag{22}$$

5.2.2.3 Determine M_{g_min} and M_{g_max}

M_{g_min} and M_{g_max} can be determined by using Equation 23 and Equation 24, respectively:

$$M_{g_min} = n \times \left(\frac{V_{O_min} + V_F}{V_{DCIN_max} / 2} \right)$$

$$M_{g_min} = 5 \times \left(\frac{42\ V \times (1 - 1\%) + 0.7\ V}{410\ V / 2} \right) = 1.03 \tag{23}$$

In these calculations, 1% is used to adjust output voltage from the line and load regulation. V_F = 0.7 V is assumed for the secondary side diode's forward-voltage drop.

$$M_{g_max} = n \times \left(\frac{V_{O_max} + V_F}{V_{DCIN_min} / 2} \right)$$

$$M_{g_max} = 5 \times \left(\frac{42\ V \times (1 + 1\%) + 0.7\ V}{375\ V / 2} \right) = 1.15 \tag{24}$$

To keep operation within the inductive region with an overload current capability of 110%, M_{g_max} is increased to 1.15 × 110% = 1.26.

Copyright © 2015, Texas Instruments Incorporated

5.2.2.4 Select L_n and Q_e

From Figure 3, if the values L_n = 5 and Q_e = 0.45 are selected, the corresponding M_{g_ap} = 1.3, which is greater than M_{g_max} = 1.26. Any other L_n curve which is not shown in Figure 3, for example L_n = 3.5, can be obtained by interpolating the curves of L_n = 3 and L_n = 4.

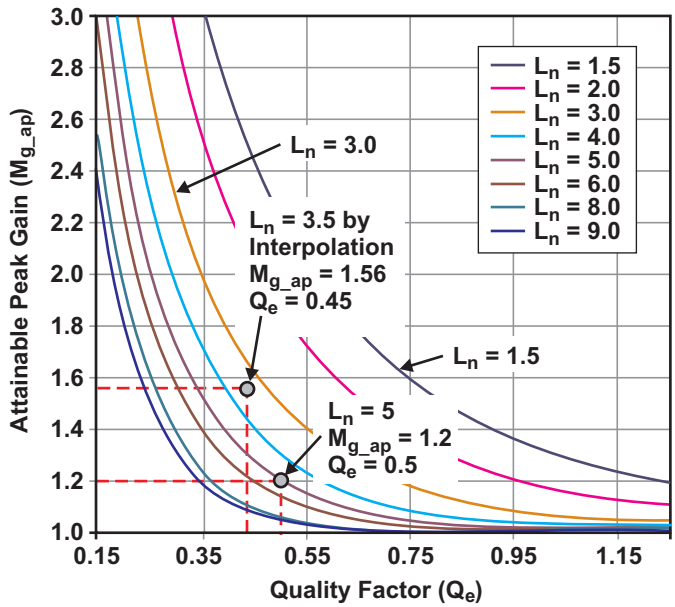

Figure 3. Peak Gain Curves

5.2.2.5 Determine Equivalent Load Resistance (R_e) of Resonant Network

R_e is determined from Equation 25. At full load,

$$R_e = \frac{8 \times n^2}{\pi^2} \times \left(\frac{V_O}{I_O}\right)$$

$$R_e = \frac{8 \times 5^2}{\pi^2} \times \left(\frac{42}{9}\right) = 94.6\ \Omega \tag{25}$$

5.2.2.6 Determine Resonant Circuit Parameters

A switching frequency of 98 kHz is selected initially for the series resonant frequency. The resonant circuit's parameters at full load are determined from Equation 26, Equation 27, and Equation 28.

$$C_r = \frac{1}{2 \times \pi \times Q_e \times f_o \times R_e}$$

$$C_r = \frac{1}{2 \times \pi \times 0.45 \times 98\ k \times 94.6} = 38.2\ nF \tag{26}$$

$$L_r = \frac{1}{(2 \times \pi \times f_o)^2 \times C_r}$$

$$L_r = \frac{1}{(2 \times \pi \times 98\ k\Omega)^2 \times 38.2\ nF} = 69\ \mu H \tag{27}$$

$$L_m = L_n \times L_r$$

$$L_m = 5 \times 69\ \mu H = 345\ \mu H \tag{28}$$

Copyright © 2015, Texas Instruments Incorporated

5.2.2.7 Verify the Resonant — Circuit Design With Selected Values

The standard values selected for the resonant circuit are L_r = 75 µH, C_r = 39 nF , L_m = 400 µH.

The design parameters are

- Series resonant frequency:

$$f_o = \frac{1}{2 \times \pi \times \sqrt{L_r \times C_r}}$$

$$f_o = \frac{1}{2 \times \pi \times \sqrt{39\ \text{nF} \times 75\ \mu\text{F}}} = 93\ \text{kHz} \tag{29}$$

- Inductance ratio:

$$L_n = \frac{L_m}{L_r}$$

$$L_n = \frac{400\ \mu\text{H}}{75\ \mu\text{H}} = 5.33 \tag{30}$$

- Quality factor at full load:

$$Q_e = \frac{\sqrt{L_r / C_r}}{R_e}$$

$$Q_e = \frac{\sqrt{75\mu / 39\ \text{n}}}{94.6} = 0.463 \tag{31}$$

Plot the gain curves corresponding to the design parameters (Figure 4). The following are operating frequency specifications:

- The frequency at series resonance is f_0 = 93 kHz.
- The frequency at M_{g_min} is f_{sw_max} = 110 kHz.
- The frequency at M_{g_max} is f_{sw_min} with an overload (110%) = ~ 70 kHz.

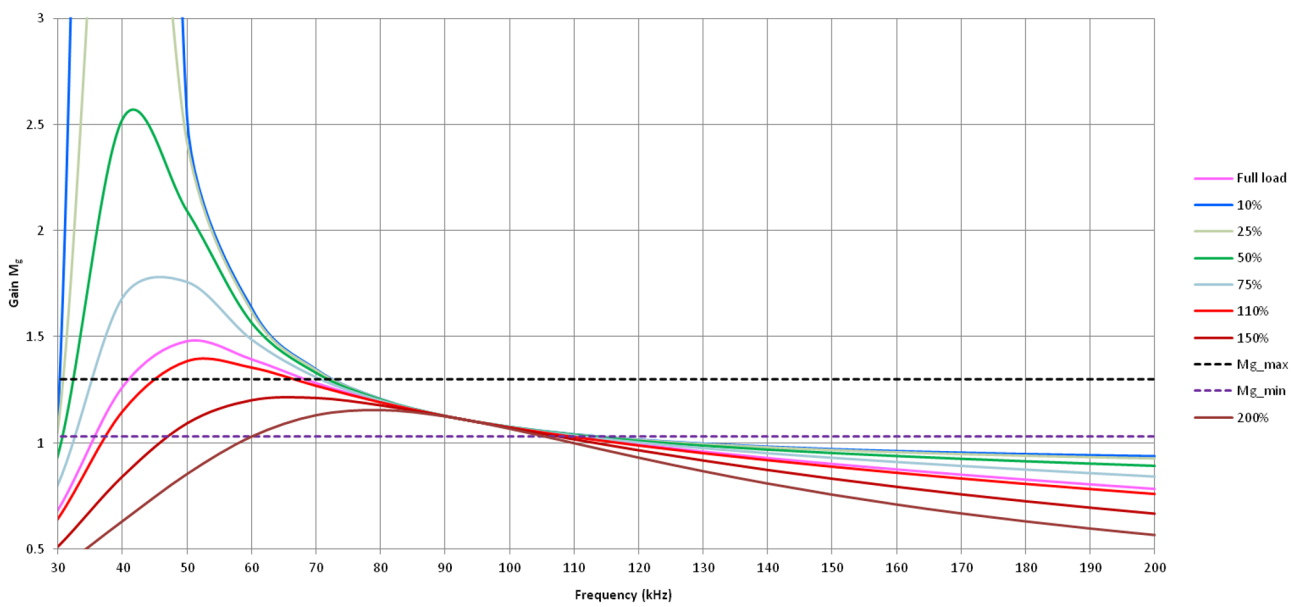

Figure 4. Verification of Resonant-Circuit Design

Copyright © 2015, Texas Instruments Incorporated

5.2.2.8 Determine the Primary-Side Currents

The primary-side RMS load current (I_{pri}) with a 110% overload is determined from Equation 32:

$$I_{pri} = \frac{\pi}{2\sqrt{2}} \times \left(\frac{I_O \times 110\%}{n}\right)$$

$$I_{pri} = 1.11 \times \left(\frac{9 \times 1.1}{5}\right) = 2.2\ A \tag{32}$$

The RMS magnetizing current (I_m) at f_{sw_min} = 70 kHz is determined from Equation 33:

$$I_m = 0.901 \times \left(\frac{n \times V_o}{\omega \times L_m}\right)$$

$$I_m = 0.901 \times \left(\frac{5 \times 42}{2 \times \pi \times 70\ kHz \times 400\ \mu H}\right) = 1.08\ A \tag{33}$$

The resonant circuit's current (I_r) is determined from Equation 34:

$$I_r = \sqrt{I_m^2 + I_{pri}^2}$$

$$I_r = \sqrt{2.2^2 + 1.08^2} = 2.45\ A \tag{34}$$

This is also the transformer's primary winding current at f_{sw_min}.

5.2.2.9 Determine the Secondary-Side Currents

The total secondary-side RMS load current is the current referred from the primary-side current (I_{pri}) to the secondary side:

With a 110% overload,

$$I_{sec} = n \times I_{pri}$$

$$I_{sec} = 5 \times 2.2\ A = 11\ A \tag{35}$$

Because the transformer's secondary side has a center-tapped configuration, this current is equally split into two transformer windings on the secondary side. The current of each winding is then calculated as

$$I_{sec_sw} = \frac{\sqrt{2}}{2} \times I_{sec}$$

$$I_{sec_sw} = \frac{\sqrt{2}}{2} \times 11\ A = 7.8\ A \tag{36}$$

The corresponding half-wave average current is

$$I_{sec_avg} = \frac{\sqrt{2}}{\pi} \times I_{sec}$$

$$I_{sec_avg} = \frac{\sqrt{2}}{\pi} \times 11\ A = 4.95\ A \tag{37}$$

Copyright © 2015, Texas Instruments Incorporated

5.2.2.10 Select the Transformer

The transformer can be built or purchased from a catalog. The specifications for this example are:

- Turns ratio (n): 5
- Primary terminal voltage: 450-V AC
- Primary winding's rated current, I_{wp}: 2.5 A
- Secondary terminal voltage: 100-V AC
- Secondary winding's rated current, I_{ws}: 7.8 A (center-tapped configuration)
- Frequency at no load: 110 kHz
- Frequency at full load: 70 kHz
- Insulation between primary and secondary sides: IEC60950 reinforced insulation

5.2.2.11 Select the Resonant Inductor

The inductor can be built or purchased from a catalog, with these specifications:

- Series resonant inductance, L_r: 75 µH
- Rated current, I_{Lr}: 2.5 A
- Terminal AC voltage:

$$V_{Lr} = \omega \times L_r \times I_r$$
$$V_{Lr} = 2 \times \pi \times 110\ \text{kHz} \times 75\ \mu\text{H} \times 2.45\ \text{A} = 127\ \text{V} \tag{38}$$

- Frequency range: 70 to 110 kHz

5.2.2.12 Select the Resonant Capacitor

The resonant capacitor (Cr) must have a low dissipation factor (DF) due to its high-frequency, high-magnitude current. Capacitors often used for LLC converters are made with metalized polypropylene film. These capacitors present very low DF and are capable of handling high-frequency current.

Before a capacitor is selected, its voltage rating has to be de-rated with regard to the switching frequency in use.

The selected capacitor (Cr) must meet these additional specifications:

- Rated current, I_{Cr}: 2.5 A
- AC voltage across capacitor

$$V_{Cr} = \frac{I_r}{\omega \times C_r}$$
$$V_{Cr} = \frac{2.45\ \text{A}}{2\pi \times 70\ \text{kHz} \times 39\ \text{nF}} = 143\ \text{V} \tag{39}$$

- RMS voltage:

$$V_{Cr_RMS} = \sqrt{(V_{DCIN_max}/2)^2 + V_{Cr}^2}$$
$$V_{Cr_RMS} = \sqrt{(410/2)^2 + 145^2} = 251\ \text{V} \tag{40}$$

Copyright © 2015, Texas Instruments Incorporated

5.2.2.13 Select the Primary Side MOSFETs

Each MOSFET sees the input voltage as its maximum applied voltage:

$$V_{DS} = 1.2 \times V_{INDC_max}$$

$$V_{DS} = 1.2 \times 410 = 492\ V \Rightarrow 500\ V \tag{41}$$

Each MOSFET conducts half of the resonant network's current in steady state after the resonant capacitor's voltage has been established. However, during the initial start-up and transient, the current in each MOSFET can be as high as the resonant current (I_r) with a 110% overload:

$$I_{DS_RMS} = I_r = 2.45\ A \tag{42}$$

MOSFET switching losses are minimized by ZVS; therefore, the conduction losses from the MOSFETs may become the main concern for the design. This suggests that MOSFETs with a low R_{DS_on} should be used.

The MOSFET selected for this design is FDPF18N50, a 500-V/18-A device. Consider using a higher voltage rating FET (600 V/650 V) based on the design de-rating needs of the end equipment.

5.2.2.14 Select Dead Time to Ensure ZVS Operation

The condition under which the converter has sufficient switching dead time for ZVS is described by Equation 43:

$$t_{dead} \geq 16 \times C_{eq} \times f_{sw} \times L_m \tag{43}$$

C_{eq} is mainly from the MOSFET C_{ds}. The MOSFET C_{ds} for FDPF18N50 is approximately 315 pF.

$$t_{dead} \geq 16 \times 315\ pF \times 120\ kHz \times 400\ \mu H$$

$$t_{dead} \geq 242\ ns \tag{44}$$

5.2.2.15 Select Diode Rectifier

The rectifier voltage rating of the diode is determined as

$$V_{diode} = \frac{V_{DCIN_max} / 2}{2} \times 2 \tag{45}$$

The current rating of the diodes is determined as

$$I_{sec_avg} = \frac{\sqrt{2}}{\pi} \times I_{sec}$$

$$I_{sec_avg} = \frac{\sqrt{2}}{\pi} \times 11\ A = 4.95\ A \tag{46}$$

The rectifier diode selected for this design is the STPS20M120.

Copyright © 2015, Texas Instruments Incorporated

5.2.2.16 Output Filter Design

In an LLC converter, the output filter may consist of capacitors alone instead of the LC filter seen in most pulse-width-modulated converters, although a small second-stage LC filter can be an option. If the filter has only capacitors, they should be chosen to allow conduction of the rectifier current through all AC components.

For the load current (I_o), the capacitor's RMS current rating at about 100 kHz is calculated as

$$I_{Co_RMS} = \sqrt{\left(\frac{\pi}{\sqrt{2}} \times I_O\right)^2 - I_O^2}$$

$$I_{Co_RMS} = 0.482 \times I_O = 0.482 \times 9.0 = 4.34\ \text{A} \tag{47}$$

Usually, a single capacitor will not allow such a high RMS current, so several capacitors connected in parallel are often used and may offer a lower profile.

The ripple voltage is a function of the amount of AC current that flows in and out of the capacitors with each switching cycle, multiplied by the capacitors' ESR. Because all electric current, including the load's DC current, can be assumed to flow in and out of the filter capacitors, this is a very good estimate of the ripple voltage. To meet the specification for a 120-mV ripple voltage, the maximum ESR should be

$$ESR_{max} = \frac{V_{O_pk_pk}}{I_{rect_pk}} = \frac{V_{O_pk_pk}}{\left(\frac{\pi}{4} \times I_O\right) \times 2}$$

$$ESR_{max} = \frac{0.12\ \text{V}}{\left(\frac{\pi}{2} \times 9\right)} = 8.5\ \text{m}\Omega \tag{48}$$

Capacitance value is selected based on

- Voltage rating: 63 V
- Ripple-current rating: 4.5 A at 100 kHz
- ESR: < 8.5 mΩ

The design uses four numbers of C3225X7S2A475M200AB (4.7 µF, 100 V) capacitors to meet the RMS rating.

Copyright © 2015, Texas Instruments Incorporated

5.2.3 Components for UCC25600 Controller

Each of the components for the controller is selected as per the datasheet recommendations. The values can also be obtained from "TIDA00355_LLC.xls" available at http://www.ti.com/tool/TIDA-00355.

5.2.3.1 Dead Time

A dead time of 350 ns is selected as per Equation 49. The resistor needed at the DT pin to GND is calculated with

$$t_d = 20\ \text{ns} + R_{dt} \times 24\ \text{ns}/\text{k}\Omega$$

$$R_{td} = \frac{350 - 20}{24} = 13.75\ \text{k}\Omega \tag{49}$$

A standard value of 13.7 kΩ is used.

5.2.3.2 Frequency Setting Resistor

The frequency limiting resistor can be calculated based on following equations:

$$I_{f\,max} = \frac{6\ \text{ns}}{\left(\frac{1}{2 \times f_{max}}\right) - 150\ \text{ns}} \tag{50}$$

A maximum frequency of 400 kHz is selected to enable burst mode of operation for light load conditions. Burst mode gets enabled when the control loop demands a switching frequency higher than 350 kHz.

$$I_{f\,max} = \frac{6\ \text{ns}}{\left(\frac{1}{2 \times 400\ \text{kHZ}}\right) - 150\ \text{ns}} = 5.46\ \text{mA} \tag{51}$$

$$I_{f\,min} = \frac{6\ \text{ns}}{\left(\frac{1}{2 \times f_{min}}\right) - 150\ \text{ns}} \tag{52}$$

With a minimum frequency of 65 kHz selected considering overload conditions,

$$I_{f\,min} = \frac{6\ \text{ns}}{\left(\frac{1}{2 \times 70\ \text{kHz}}\right) - 150\ \text{ns}} = 0.86\ \text{mA} \tag{53}$$

Minimum frequency limiting resistor is calculated as

$$R_{f\,min} = \frac{2.5\ \text{V}}{I_{f\,min}}$$

$$R_{f\,min} = \frac{2.5\ \text{V}}{0.86\ \text{mA}} = 2.9\ \text{k}\Omega \tag{54}$$

Selected value is 2.34 kΩ, to avoid lower frequency operation.

$$R_{f\,max} = \frac{2.5\ \text{V}}{I_{f\,max} - I_{f\,min}}$$

$$R_{f\,max} = \frac{2.5\ \text{V}}{5.46\ \text{mA} - 0.86\ \text{mA}} = 0.54\ \text{mA} \tag{55}$$

Copyright © 2015, Texas Instruments Incorporated

5.2.3.3 Overcurrent Protection

The current can be indirectly sensed through the voltage across resonant capacitor by using the sensing network shown in Figure 5.

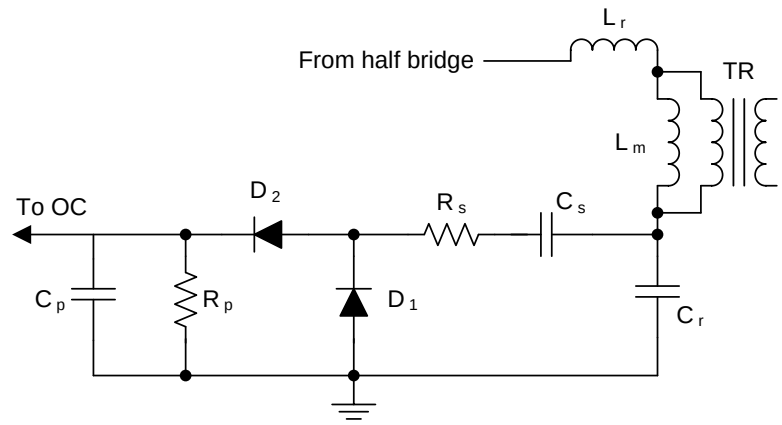

Figure 5. Current Sensing for LLC Resonant Converter

Current sensing network components are calculated as

Transfer AC voltage across resonant S capacitor into current source R_s is given by

$$R_s = \frac{V_{Crpk}^2}{2 \times P_{rs}}$$

$$V_{Crpk} = \frac{4 \times V_{Cr}}{\pi} = \frac{4 \times 143}{\pi} = 182\ \text{V}$$

$$R_s = \frac{182^2}{2 \times 0.05\ \text{W}} = 331\ \text{k}\Omega \tag{56}$$

A standard value of 316 kΩ is selected.

The blocking DC voltage on resonant capacitor is given by

$$C_s = \frac{10}{R_s \times f_{min}}$$

$$C_s = \frac{10}{316\ \text{k} \times 70\ \text{kHz}} = 0.45\ \text{nF} \tag{57}$$

A standard value of 470 pF is selected.

The load resistor of the current source is given by

$$R_p = \frac{R_s}{V_{Crpk}} \times \pi$$

$$R_p = \frac{316\ \text{k}}{182} \times \pi = 5.45\ \text{k}\Omega \tag{58}$$

A standard value of 5.49 kΩ is selected.

For the filter capacitor for noise suppression,

$$C_p = \frac{10}{R_p \times f_{min}}$$

$$C_p = \frac{10}{5.49\ \text{k} \times 70\ \text{k}} = 26\ \text{nF} \tag{59}$$

A standard value of 33 nF is selected.

Copyright © 2015, Texas Instruments Incorporated

5.2.4 CC-CV Feedback

The charging cycle of a Li-ion battery (or a similar battery) consists of a constant-current phase and a constant-voltage phase. To reflect this behavior, this reference design contains two feedback paths, implemented with the highly integrated op-amp, TL103W. The TL103W integrates two precision op-amps and a 2.5-V voltage reference — both of which ease out CC-CV control loop circuitry implementation.

The first feedback path regulates the voltage in the constant-voltage phase through the resistor divider network formed by R27 and R46. The voltage obtained is compared with the internal reference of 2.5 V to regulate the loop.

The second feedback path regulates the current in the constant-current phase once the output current reaches the output-current limit. The output-current limit is set by the value of the two parallel shunt resistors, R18 and R20. These resistors determine the current regulation set point and must be adequately rated in terms of power dissipation. The voltage across those resistors is compared with the reference set by R29 and R30.

The designer can change the output voltage by changing the value of R27 and R46. The designer can change the output current limit by changing R18 and R20. If the temperature dissipated by the shunt resistors is too high, the designer may either increase the number of shunt resistors in parallel or tune the voltage reference set by R29 and R30.

5.3 Bias Power Supply

The PFC, LLC controllers, and gate driver need auxiliary power supply for start-up and operation. An auxiliary power supply of 1.3 W is produced on board by using a quasi-resonant/discontinuous current mode flyback controller with primary-side control, the UCC28722. This controller offers a low part count and relatively low-cost solution eliminating the need for opto-coupler and TL431 feedback circuitry. In addition, quasi-resonant topology ensures high efficiency, optimizing the losses.

The converter is powered from the output of the PFC pre-regulator stage and must be able to start up prior to the PFC stage being operational. For this reason, the circuit is designed to operate over a wide input voltage, 100-V to 450-V DC. The flyback transformer has two output windings, which are isolated to each other and supply different circuits on the board. The design specifications of these outputs are shown in Table 4:

Table 4. Design Specifications of Bias Supply

PARAMETER	SPECIFICATION
Input voltage range	160-V AC to 265-V AC
Output voltages	13 V at 50 mA All circuits on the primary side: PFC controller, LLC controller, gate driver UCC27714
	6.5 V at 100 mA Internal circuit needs and external microcontroller power

Design of power stage components (flyback transformer, output filter capacitor, and feedback circuitry) is explained in detail in the UCC28722/UCC28720 application report (SLUA700).

All design calculations are available in the Excel file “TIDA00355_Bias_Supply.xlsx” available at http://www.ti.com/tool/TIDA-00355.

Copyright © 2015, Texas Instruments Incorporated

6 Getting Started Hardware

6.1 Test Conditions

Input conditions:

- V_{IN}: 175-V to 265-V AC
- Set the input current limit to 3.5 A

Output:

- Variable simulated battery load, 20 to 42 V, 0 to 9 A

6.2 Equipment Needed

- Isolated AC source
- Single-phase power analyzer
- Digital oscilloscope
- Multi-meters
- Electronic load to simulate battery

6.3 Procedure

1. Connect input terminals (connector J1) of the reference board to the AC power source.
2. Connect output terminals (connector J3) to electronic load, maintaining correct polarity.
3. Set the minimum load of about 100 mA, and minimum voltage of 25 V.
4. Gradually increase the input voltage from 0 V to turn on voltage of 175-V AC.
5. Turn on the load to apply voltage to the output terminals of the charger.
6. Observe the startup conditions for smooth switching waveforms.

Copyright © 2015, Texas Instruments Incorporated

7 Test Data

7.1 Efficiency and Regulation

7.1.1 Standby Power With Battery Disconnected

The standby power was noted at various input voltages with no load conditions (that is, when the battery is disconnected). The results are tabulated in Table 5 and are in accordance with the target specifications.

Table 5. Standby Test Results

AC INPUT	INPUT POWER (BATTERY DISCONNECTED)
175-V AC	140 mW
230-V AC	150 mW
265-V AC	170 mW

7.1.2 Performance Data of Charger

Table 6. At 175-V AC

V_{IN} (VAC)	P_{IN} (W)	PF	I_{THD}	V_O (V)	I_O (A)	P_O (W)	EFFICIENCY (%)
175	0.14	–	–	0.00	0.000	0.00	0.00
175	2.80	–	–	42.37	0.000	0.00	0.00
175	8.59	0.804	44.7	42.35	0.100	4.24	49.31
175	27.28	0.939	23.1	42.35	0.500	21.18	77.63
175	50.74	0.977	15.8	42.35	1.000	42.35	83.46
175	141.90	0.997	1.3	42.33	3.000	127.00	89.50
175	233.70	0.998	2.0	42.32	5.000	211.58	90.53
175	327.20	0.999	3.2	42.30	7.000	296.10	90.50
175	422.30	0.990	13.9	42.28	9.000	380.55	90.11
175	429.80	0.989	14.9	42.28	9.150	386.90	90.02
175	410.90	0.997	7.2	40.00	9.210	368.40	89.66
175	363.00	0.998	5.9	35.00	9.220	322.70	88.90
175	314.80	0.998	4.5	30.00	9.210	276.30	87.77
175	266.50	0.998	3.5	25.00	9.200	230.00	86.30
175	218.30	0.998	2.5	20.00	9.200	184.00	84.29

Table 7. At 230-V AC

V_{IN} (VAC)	P_{IN} (W)	PF	I_{THD}	V_O (V)	I_O (A)	P_O (W)	EFFICIENCY (%)
230	0.17	–	–	0.00	0.000	0.00	0.00
230	1.90	–	–	42.39	0.000	0.00	0.00
230	8.77	0.723	54.1	42.37	0.100	4.24	48.31
230	26.82	0.907	24.3	42.37	0.500	21.18	78.98
230	49.77	0.942	21.1	42.36	1.000	42.36	85.11
230	140.30	0.992	2.8	42.34	3.000	127.03	90.54
230	231.20	0.996	1.9	42.32	5.000	211.62	91.53
230	323.60	0.997	2.7	42.30	7.000	296.13	91.51
230	416.00	0.994	9.4	42.28	9.000	380.56	91.48
230	423.30	0.993	9.9	42.28	9.180	388.10	91.69
230	405.10	0.997	4.0	40.00	9.250	370.00	91.34

Copyright © 2015, Texas Instruments Incorporated

Table 7. At 230-V AC (continued)

V_{IN} (VAC)	P_{IN} (W)	PF	I_{THD}	V_O (V)	I_O (A)	P_O (W)	EFFICIENCY (%)
230	358.30	0.997	3.3	35.00	9.245	323.58	90.31
230	310.70	0.997	2.7	30.00	9.235	277.05	89.17
230	263.20	0.996	2.4	25.00	9.230	230.75	87.67
230	215.80	0.996	2.0	20.00	9.220	184.40	85.45

Table 8. At 265-V AC

V_{IN} (VAC)	P_{IN} (W)	PF	I_{THD}	V_O (V)	I_O (A)	P_O (W)	EFFICIENCY (%)
265	0.18	–	–	0.00	0.000	0.00	0.00
265	2.00	–	–	42.39	0.000	0.00	0.00
265	8.33	0.625	97.0	42.37	0.100	4.24	50.86
265	26.29	0.880	34.0	42.36	0.500	21.18	80.57
265	49.22	0.911	23.0	42.36	1.000	42.36	86.06
265	138.64	0.987	8.1	42.34	3.000	127.02	91.62
265	229.60	0.994	2.4	42.32	5.000	211.61	92.16
265	321.40	0.996	2.6	42.30	7.000	296.11	92.13
265	413.90	0.996	3.6	42.28	9.000	380.51	91.93
265	422.30	0.995	6.3	42.26	9.180	387.93	91.86
265	404.20	0.997	3.2	40.00	9.250	370.00	91.54
265	357.30	0.996	2.9	35.00	9.245	323.58	90.56
265	309.90	0.996	2.6	30.00	9.235	277.05	89.40
265	262.30	0.995	2.4	25.00	9.230	230.75	87.97
265	215.10	0.993	2.5	20.00	9.220	184.40	85.73

7.1.3 Efficiency of Overall System

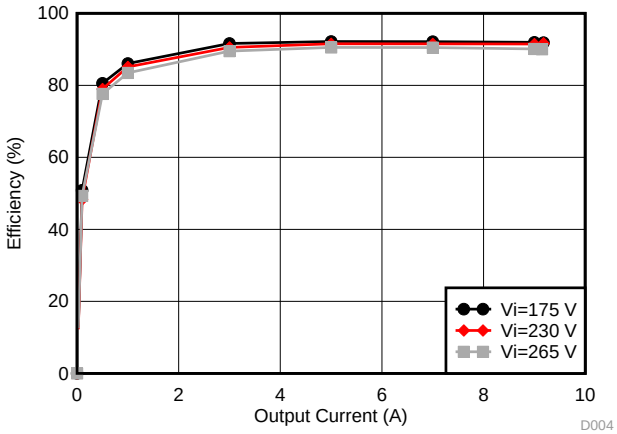

Figure 6. Efficiency in CV Operation

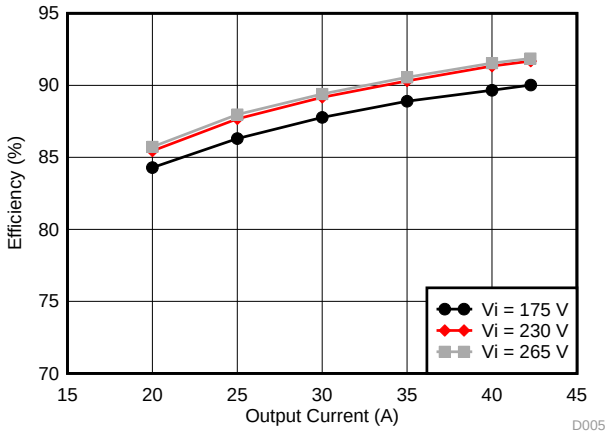

Figure 7. Efficiency in CC Operation

Copyright © 2015, Texas Instruments Incorporated

7.1.4 Load Regulation

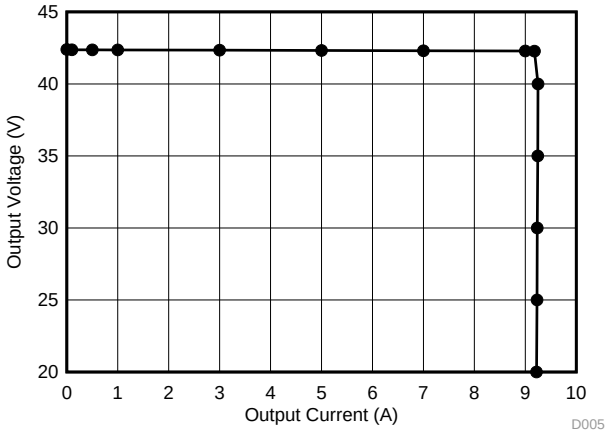

Figure 8. Load Regulation

7.1.5 Efficiency of PFC Power Stage

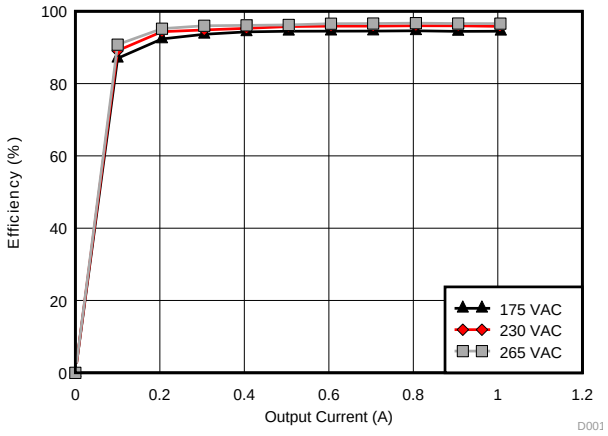

Figure 9. PFC Power Stage Efficiency

7.1.6 Efficiency of LLC Power Stage

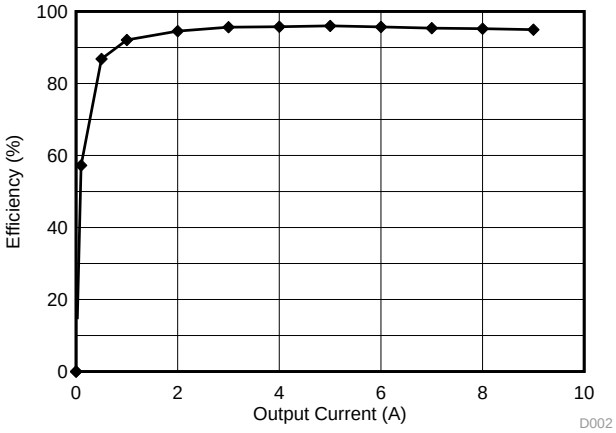

Figure 10. LLC Converter Efficiency in CV Operation

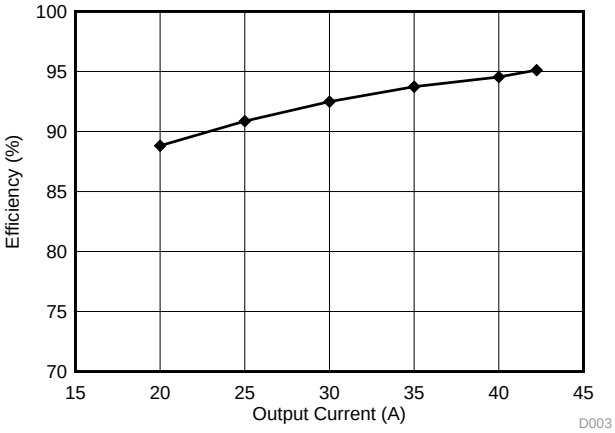

Figure 11. LLC Converter Efficiency in CC Operation

Copyright © 2015, Texas Instruments Incorporated

7.2 Waveforms

7.2.1 PFC Switching Waveforms

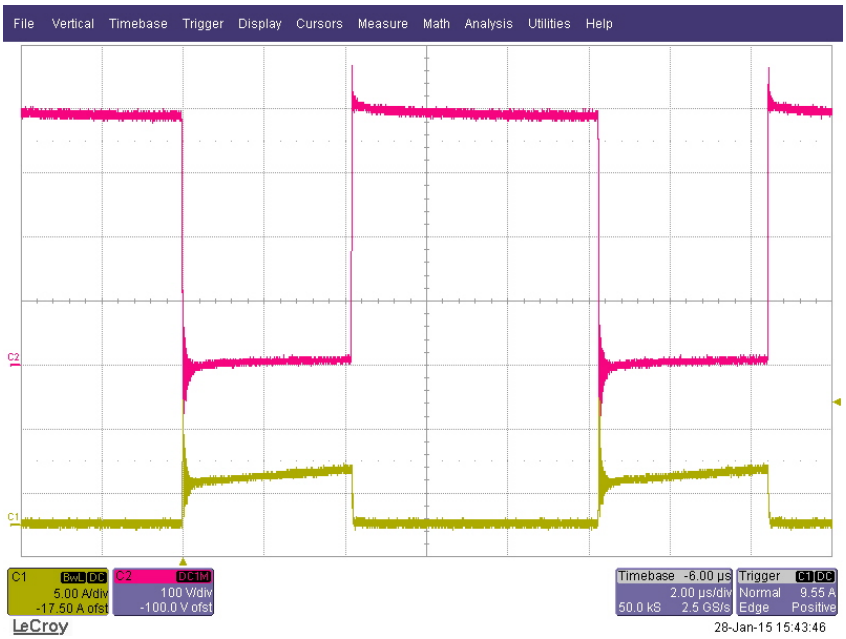

Figure 12. V_{IN} = 175-V AC, Full Load

NOTE: Red trace: Drain voltage, 100 V/div; Yellow trace: Drain current, 5 A/div

Figure 13. V_{IN} = 265-V AC, Full Load

NOTE: Red trace: Drain voltage, 100 V/div; Yellow trace: Drain current, 5 A/div

Copyright © 2015, Texas Instruments Incorporated

7.2.2 LLC Waveforms

Figure 14. Full Load, CV/CC Transition Point

NOTE: Red trace: Switch node voltage, 100 V/div; Yellow trace: Resonant tank current, 2 A/div

Figure 15. Deep CC Operation, V_O = 20 V

NOTE: Red trace: Switch node voltage, 100 V/div; Yellow trace: Resonant tank current, 2 A/div

Copyright © 2015, Texas Instruments Incorporated

7.2.3 Output Diode Stress

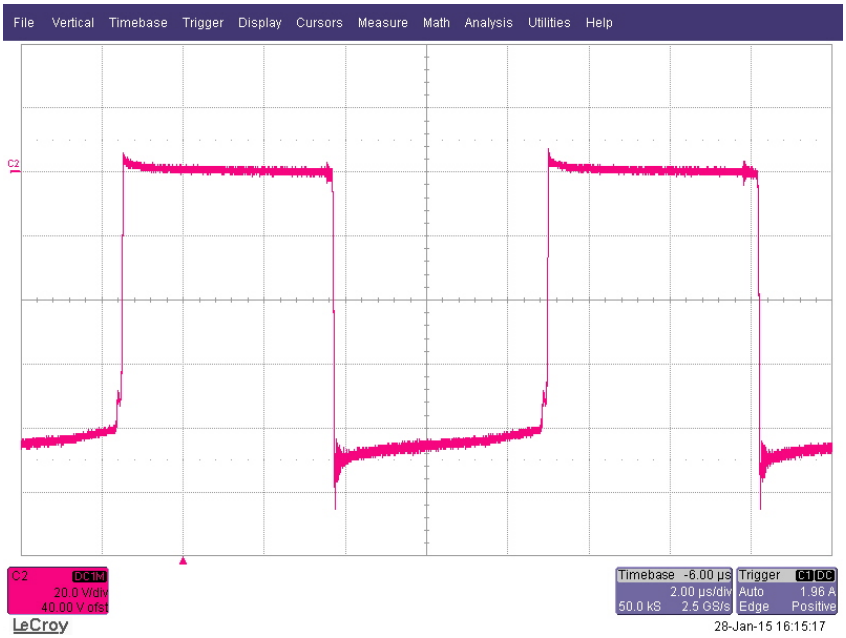

Figure 16. Full Load, CV/CC Transition Point

NOTE: Red trace: Output diode reverse voltage, 20 V/div

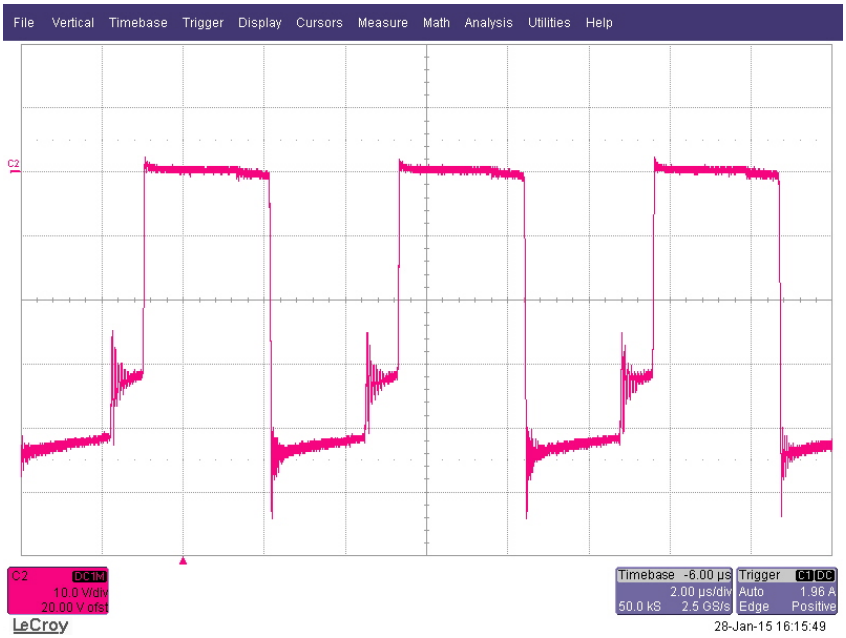

Figure 17. Deep CC Operation, V_O = 20 V

NOTE: Red trace: Output diode reverse voltage, 10 V/div

Copyright © 2015, Texas Instruments Incorporated

7.2.4 Bias Supply Switching Waveforms

Figure 18. Auxiliary Output (5 V) Loaded to 100 mA

NOTE: Red trace: Collector voltage, 100 V/div; Yellow trace: Collector current, 100 mA/div

Copyright © 2015, Texas Instruments Incorporated

7.2.5 Output Ripple and Noise

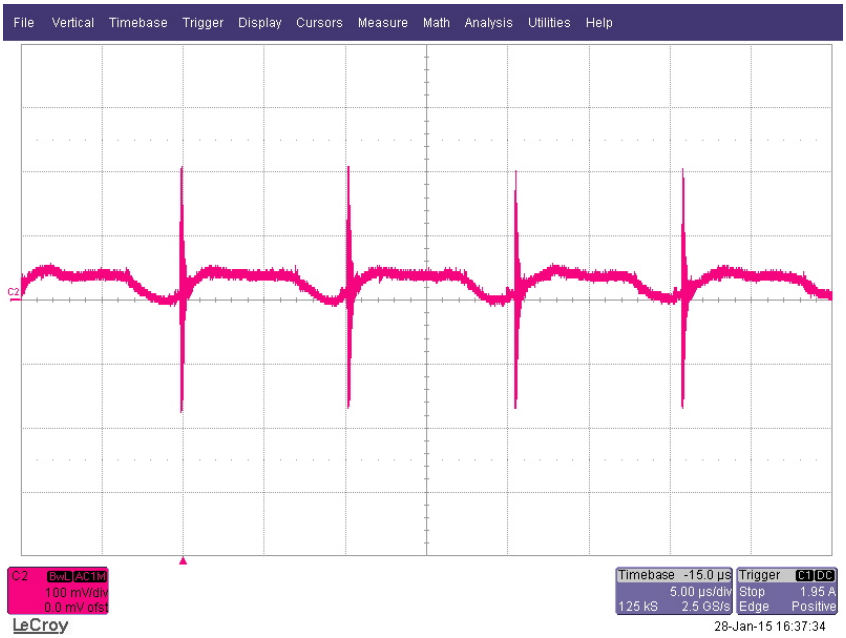

Figure 19. Full Load, CV/CC Transition Point

NOTE: Red trace: Output voltage ripple and noise, 100 mV/div

Figure 20. CC Operation, V_O = 40 V

NOTE: Red trace: Output voltage ripple and noise, 500 mV/div;
Yellow trace: Output current ripple, 1 A/div

Copyright © 2015, Texas Instruments Incorporated

7.2.6 Start-Up

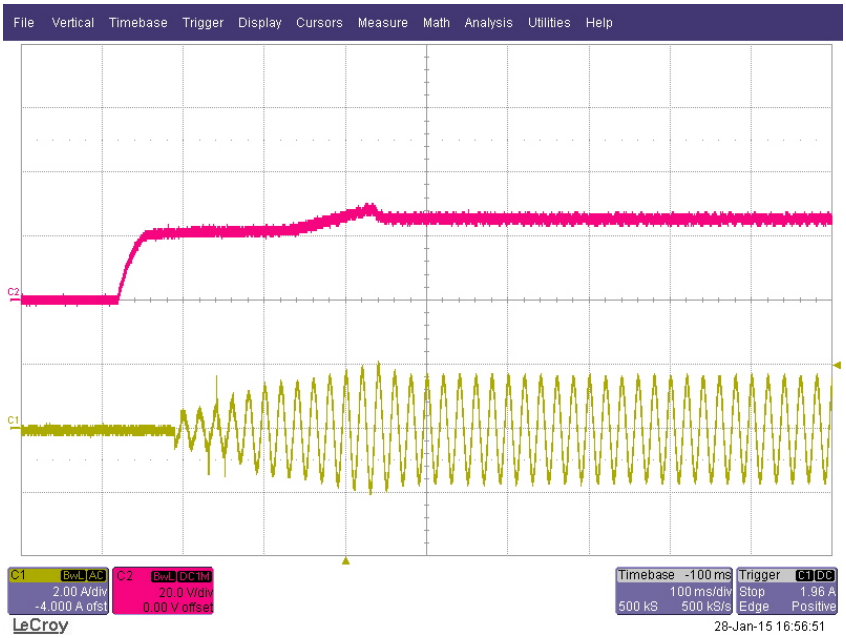

Figure 21. Deep CC Operation, V_O = 20 V

NOTE: Red trace: Output voltage, 20 V/div; Yellow trace: Input current, 2 A/div

7.2.7 Inrush

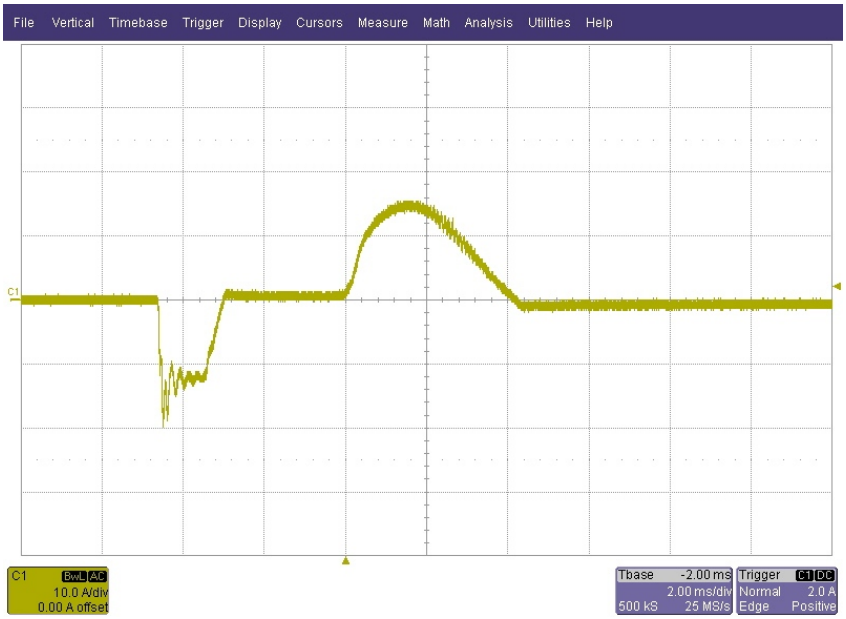

Figure 22. V_{IN} = 265-V AC, Full Load

NOTE: Yellow trace: Input current, 10 A/div

Copyright © 2015, Texas Instruments Incorporated

7.3 Conducted Emissions

7.3.1 Emissions at Full Load

Generally conducted emissions will be more at full load. So, this operating point is chosen for measuring conducted EMI.

230-V AC input, 42-V, 9-A simulated battery load connected to PSU output with short leads.

The conducted peak emissions in a pre-compliance test set-up were compared against EN55022 Class-A quasi-peak limits and found to be meeting them comfortably so the quasi-peak emissions can also meet them easily.

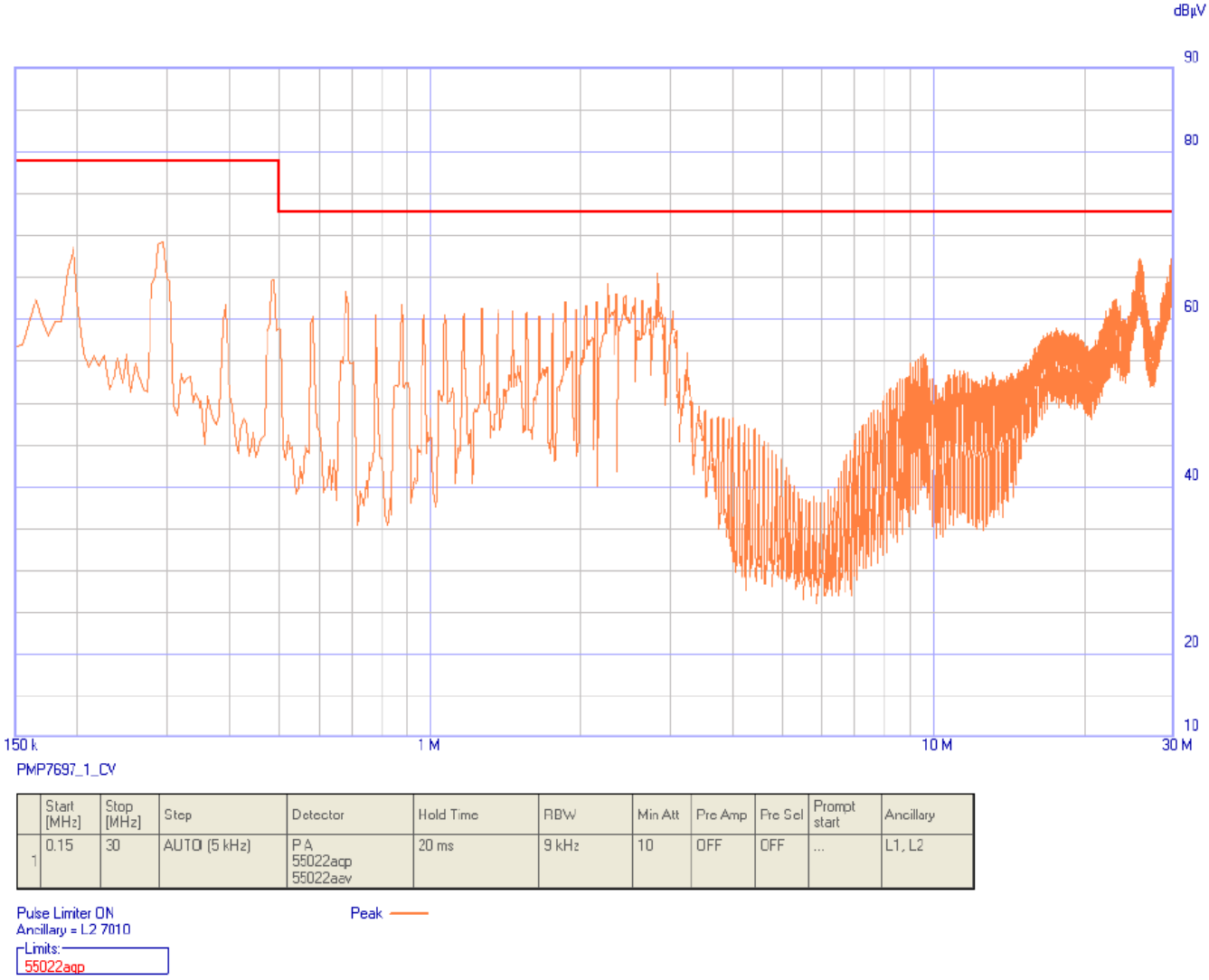

	Start [MHz]	Stop [MHz]	Step	Detector	Hold Time	RBW	Min Att	Pre Amp	Pre Sel	Prompt start	Ancillary
1	0.15	30	AUTO (5 kHz)	PA 55022aqp 55022aav	20 ms	9 kHz	10	OFF	OFF	...	L1, L2

Figure 23. Conducted Peak Emissions at Full Load

Copyright © 2015, Texas Instruments Incorporated

230-V AC input, 42-V, 9-A simulated battery load connected to PSU output with short leads.

The conducted average emissions in a pre-compliance test setup were compared against EN55022 Class-A average limits and found to be meeting them.

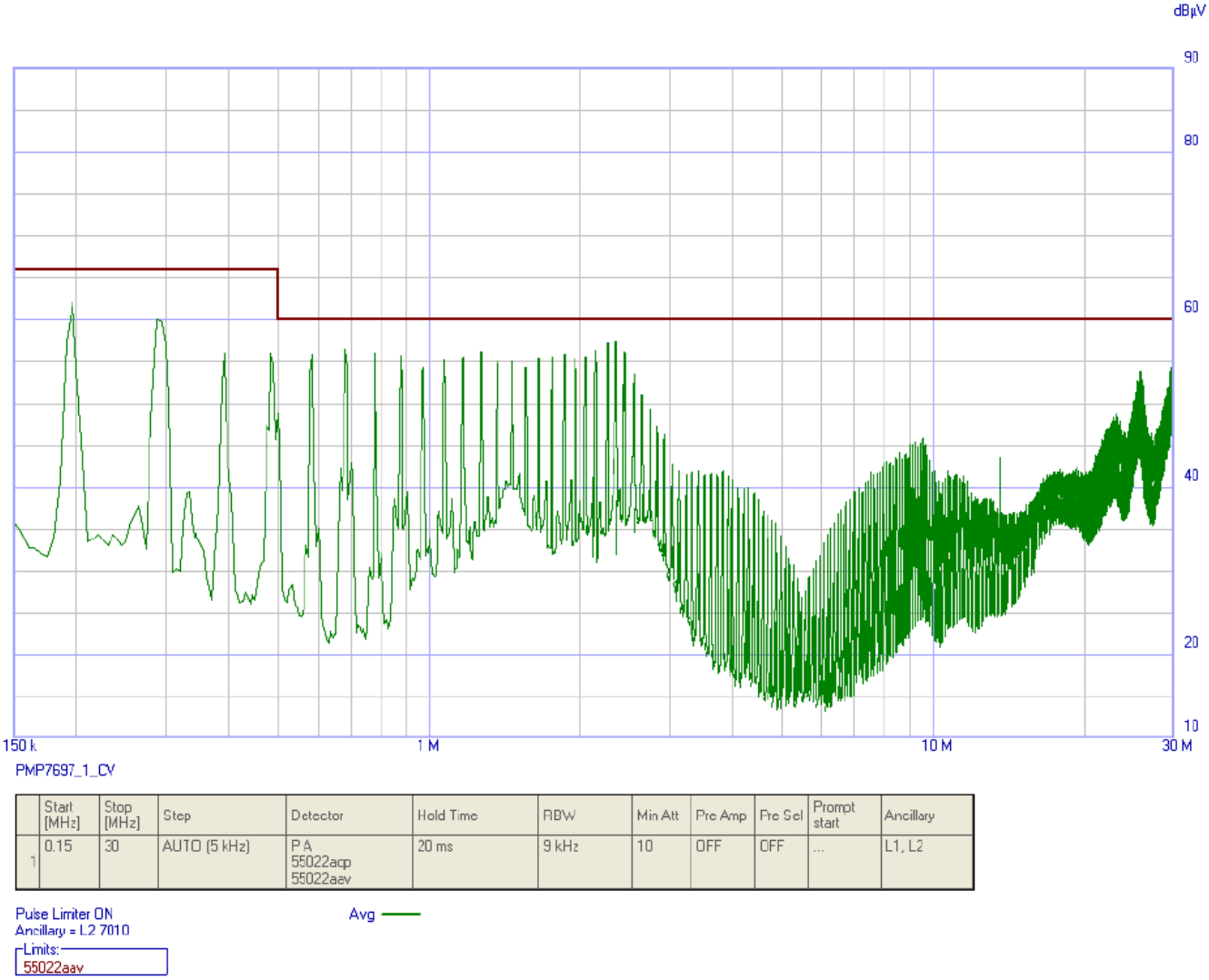

	Start [MHz]	Stop [MHz]	Step	Detector	Hold Time	RBW	Min Att	Pre Amp	Pre Sel	Prompt start	Ancillary
1	0.15	30	AUTO (5 kHz)	P A 55022acp 55022aav	20 ms	9 kHz	10	OFF	OFF	...	L1, L2

Figure 24. Conducted Average Emissions at Full Load

Copyright © 2015, Texas Instruments Incorporated

7.3.2 Emissions at Deep CC Load

Generally conducted emissions will be more at full load. However, the LLC-stage operating frequency is at its maximum in deep CC operating point. So this operating point is also chosen for measuring conducted EMI to verify if the increased operating frequency causes increased EMI.

230-V AC input, 25-V, 9-A simulated battery load connected to PSU output with short leads.

The conducted peak emissions in a pre-compliance test set-up were compared against EN55022 Class-A quasi-peak limits and found to be meeting them comfortably. So the quasi-peak emissions can also meet them easily.

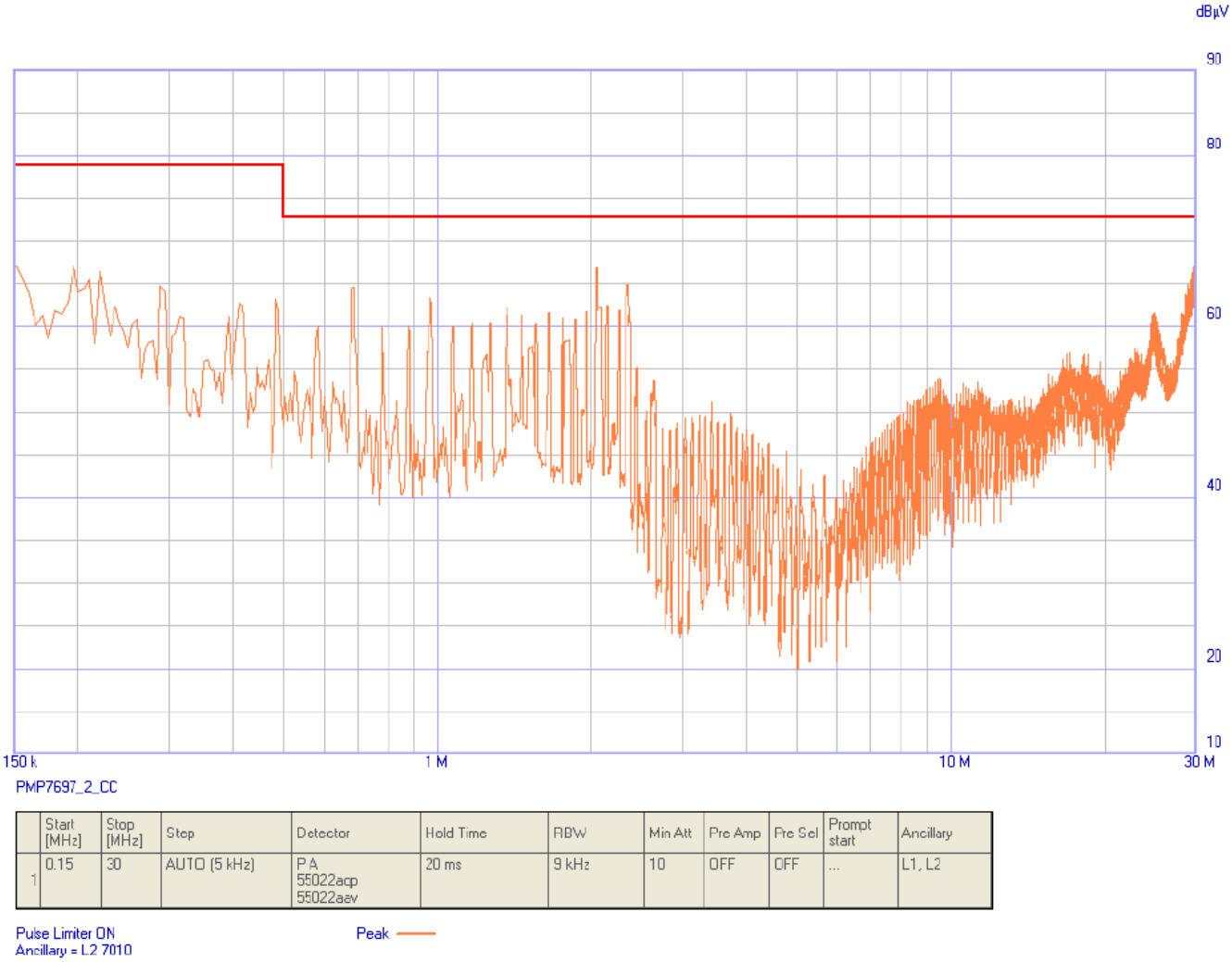

	Start [MHz]	Stop [MHz]	Step	Detector	Hold Time	RBW	Min Att	Pre Amp	Pre Sel	Prompt start	Ancillary
1	0.15	30	AUTO (5 kHz)	P A 55022acp 55022aav	20 ms	9 kHz	10	OFF	OFF	...	L1, L2

Figure 25. Conducted Peak Emissions at Deep CC Load

Copyright © 2015, Texas Instruments Incorporated

230-V AC input, 25-V, 9-A simulated battery load connected to PSU output with short leads.

The conducted average emissions in a pre-compliance test set-up were compared against EN55022 Class-A average limits and found to be meeting them.

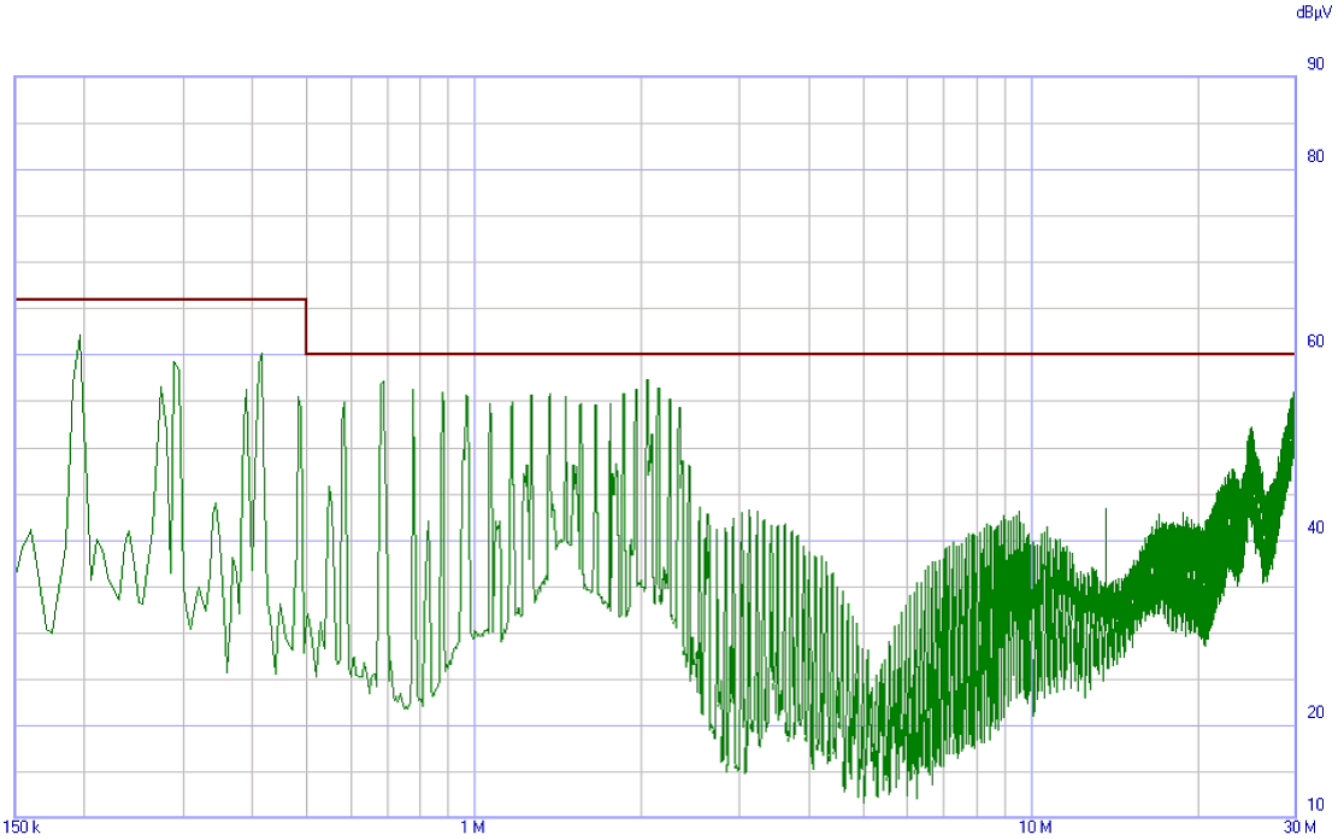

PMP7697_2_CC

	Start [MHz]	Stop [MHz]	Step	Detector	Hold Time	RBW	Min Att	Pre Amp	Pre Sel	Prompt start	Ancillary
1	0.15	30	AUTO (5 kHz)	P A 55022aqp 55022aav	20 ms	9 kHz	10	OFF	OFF	...	L1, L2

Pulse Limiter ON
Ancillary = L2 7010

Avg

Figure 26. Conducted Average Emissions at Deep CC Load

Copyright © 2015, Texas Instruments Incorporated

8 Design Files

8.1 Schematics

To download the most recent schematics, see the design files at TIDA-00355.

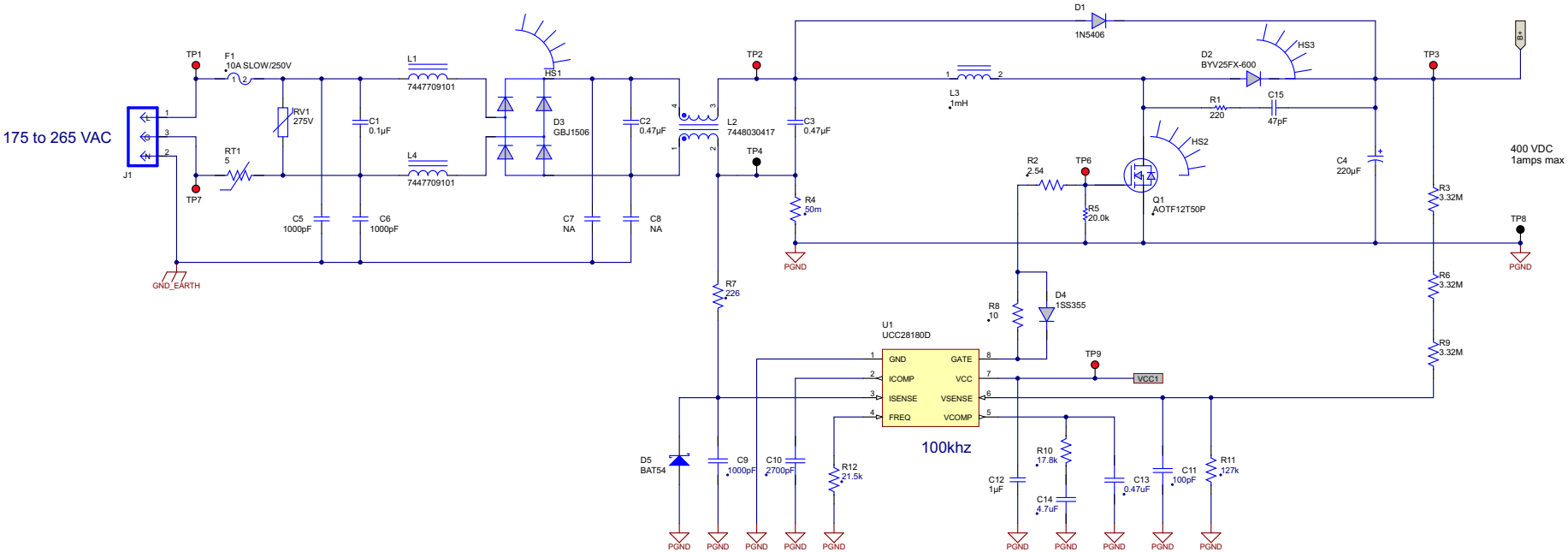

Figure 27. EMI Filter and PFC

Copyright © 2015, Texas Instruments Incorporated

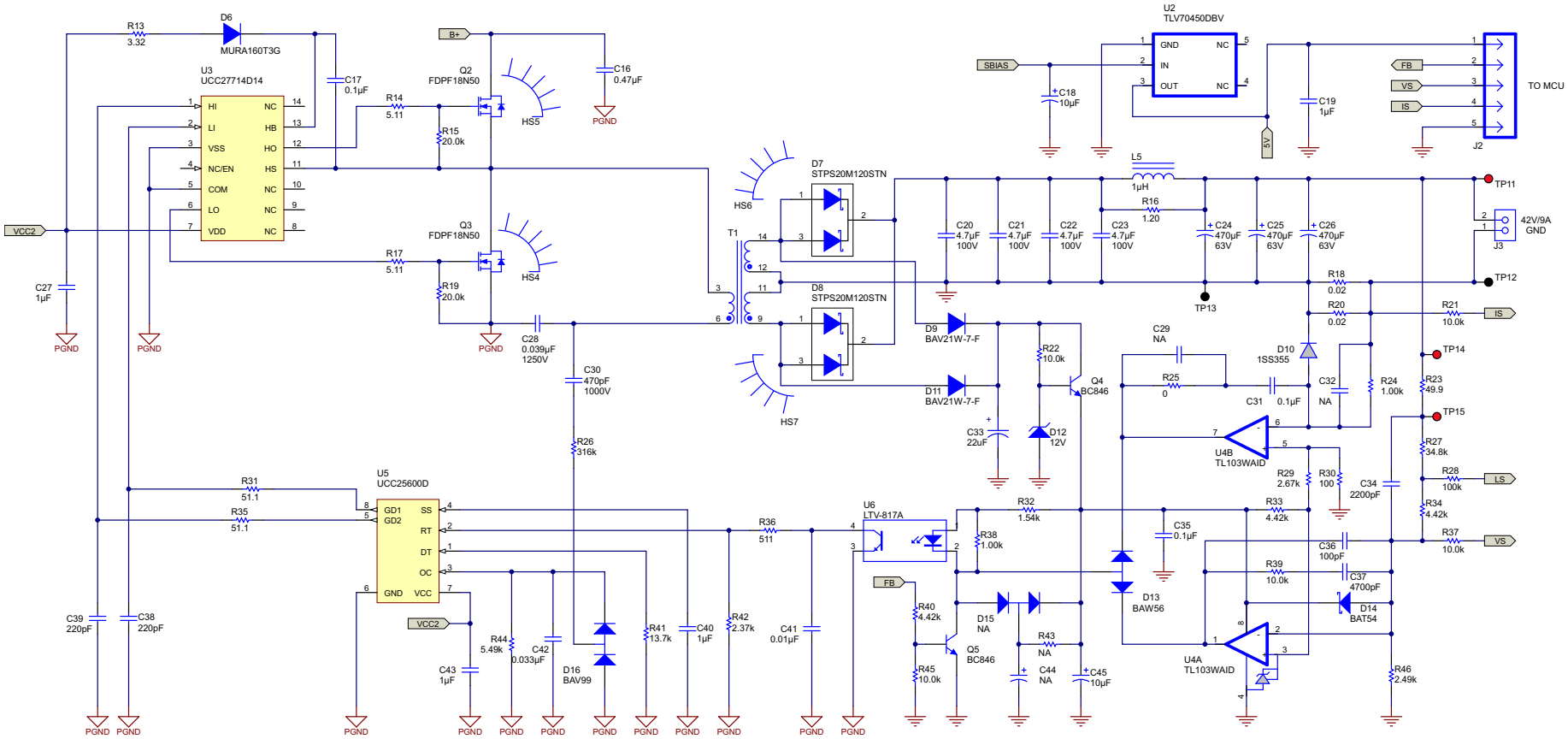

Figure 28. LLC Resonant Stage

Copyright © 2015, Texas Instruments Incorporated

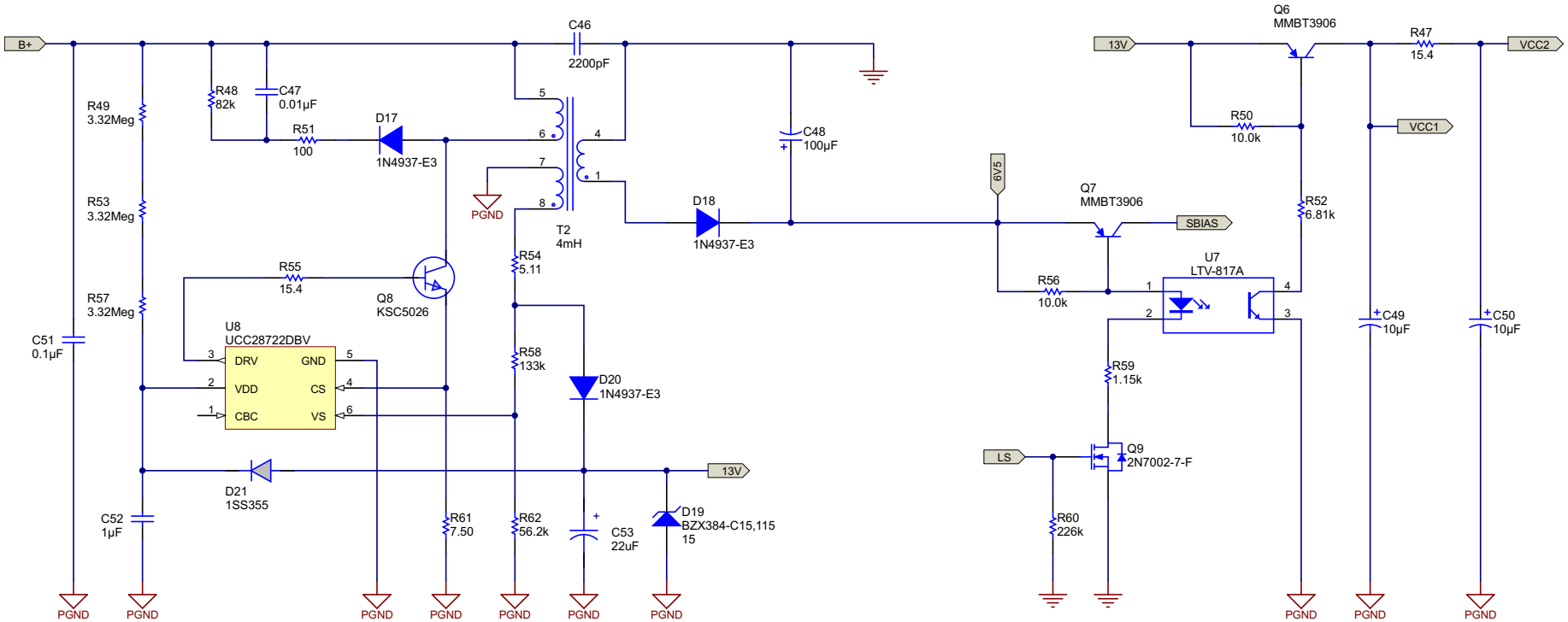

Figure 29. Bias Power and Control

Copyright © 2015, Texas Instruments Incorporated

8.2 Bill of Materials

To download the most recent bill of materials (BOM), see the design files at TIDA-00355.

Table 9. BOM

QTY	REFERENCE	PART DESCRIPTION	MANUFACTURER	MANUFACTURER PART NUMBER	NOTE
1	PCB1	Printed Circuit Board	Any	TIDA-00355	Fitted
2	C1, C51	CAP, Film, 0.1uF, 630V, +/-10%, TH	Kemet	R46KI310040M1K1	Fitted
3	C2, C3, C16	CAP, Film, 0.47uF, 630V, +/-10%, TH	Kemet	R463I347000N0M	Fitted
1	C4	CAP, AL, 220uF, 450V, +/-20%, TH	Nichicon	LGU2W221MELB	Fitted
2	C5, C6	CAP, CERM, 1000pF, 300VAC, +/-20%, X1Y2, 7mm dia.	Kemet	C901U102MZWDBA7317	Fitted
1	C46	CAP, CERM, 2200pF, 440VAC, +/-20%, X1Y1, 9mm dia.	Kemet	C921U222MVVDBA7317	Fitted
1	C9	CAP, CERM, 1000 pF, 50 V, +/- 10%, X7R, 0603	MuRata	GRM188R71H102KA01D	Fitted
1	C10	CAP, CERM, 2700 pF, 50 V, +/- 10%, X7R, 0603	MuRata	GRM188R71H272KA01D	Fitted
2	C11, C36	CAP, CERM, 100pF, 50V, +/-5%, C0G/NP0, 0603	TDK	C1608C0G1H101J	Fitted
6	C12, C19, C27, C40, C43, C52	CAP, CERM, 1uF, 50V, +/-10%, X7R, 0805	Taiyo Yuden	UMK212B7105KG-T	Fitted
1	C13	CAP, CERM, 0.47 µF, 50 V, +/- 10%, X5R, 0603	Taiyo Yuden	UMK107ABJ474KA-T	Fitted
1	C14	CAP, CERM, 4.7 µF, 50 V, +/- 10%, X5R, 0805	Taiyo Yuden	TMK212BJ475KG-T	Fitted
1	C15	CAP, CERM, 47pF, 1000V, +/-5%, U2J, 1206	Murata	GRM31A7U3A470JW31D	Fitted
1	C17	CAP, CERM, 0.1 µF, 50 V, +/- 10%, X7R, 0805	Samsung	CL21B104KBCNNNC	Fitted
4	C18, C45, C49, C50	CAP, AL, 10uF, 35V, +/-20%, 0.95 ohm, TH	Nichicon	UPW1V100MDD6	Fitted
4	C20, C21, C22, C23	CAP, CERM, 4.7uF, 100V, +/-20%, X7S, 1210	TDK	C3225X7S2A475M200AB	Fitted
3	C24, C25, C26	CAP, AL, 470uF, 63V, +/-20%, 55mohm, TH	Nichicon	UPW1J471MHD6	Fitted
1	C28	CAP, Film, 0.039uF, 1KV, +/-5%, TH	Panasonic	ECQ-E10393JF	Fitted
1	C30	CAP, CERM, 470pF, 1000V, +/-10%, X7R, 1206	MuRata	GRM31BR73A471KW01L	Fitted
2	C31, C35	CAP, CERM, 0.1uF, 50V, +/-10%, X7R, 0603	Samsung	CL10B104KB8SFNC	Fitted
2	C33, C53	CAP, AL, 22 µF, 25 V, +/- 20%, TH	Nichicon	UPW1E220MDD6	Fitted
1	C34	CAP, CERM, 2200pF, 50V, +/-10%, X7R, 0603	Kemet	C0603C222K5RACTU	Fitted
1	C37	CAP, CERM, 4700pF, 50V, +/-10%, X8R, 0603	MuRata	GRM188R71H472KA01D	Fitted
2	C38, C39	CAP, CERM, 220pF, 50V, +/-5%, C0G/NP0, 0603	Samsung	CL10C221JB8NNNC	Fitted
1	C41	CAP, CERM, 0.01uF, 50V, +/-10%, X7R, 0603	Samsung	CL10B103KB8NNNC	Fitted
1	C42	CAP, CERM, 0.033uF, 50V, +/-10%, X7R, 0603	Samsung	CL10B333KB8SFNC	Fitted
1	C47	CAP, CERM, 0.01uF, 250V, +/-10%, X7R, 0805	TDK	C2012X7R2E103K125AA	Fitted
1	C48	CAP, AL, 100uF, 25V, +/-20%, TH	Rubycon	35ZLH100MEFC6.3X11	Fitted
1	D1	DIODE, General Purpose, 600V, 3.0A	ON Semiconductor	1N5406G	Fitted
1	D2	Diode, Dual Ultrafast, 600V, 8A	NXP	BYV25FX-600	Fitted

Copyright © 2015, Texas Instruments Incorporated

Table 9. BOM (continued)

QTY	REFERENCE	PART DESCRIPTION	MANUFACTURER	MANUFACTURER PART NUMBER	NOTE
1	D3	Diode, Bridge Rectifier, 15A, 600V	Micro Commercial Co	GBJ1506-BP	Fitted
3	D4, D10, D21	Diode, Switching, 90V, 225 mA Ifm, High speed	Rohm Semiconductor	1SS355TE-17	Fitted
2	D5, D14	Diode, Schottky, 30V, 0.2A, SOD-323	Micro Commercial Co	BAT54WS-TP	Fitted
1	D6	Diode, Ultrafast, 600 V, 1 A, SMA	ON Semiconductor	MURA160T3G	Fitted
2	D7, D8	DIODE SCHOTTKY 100V 30A TO220AB	ST Microelectronics	STPS20M120STN	Fitted
2	D9, D11	Diode, Switching, 200V, 0.2A, SOD-123	Diodes Inc.	BAV21W-7-F	Fitted
1	D12	Diode, Zener, 12V, 200mW, SOD-323	Diodes Inc.	MMSZ5242BS-7-F	Fitted
1	D13	Diode, Switching, 70V, 0.25A, SOT-23	ON Semiconductor	BAW56LT1G	Fitted
1	D16	Diode, Switching, 75V, 0.3A, SOT-23	ON Semiconductor	BAV99LT1G	Fitted
3	D17, D18, D20	Diode, Switching, 600V, 1A, TH	Fairchild Semiconductor	1N4937	Fitted
1	D19	Diode, Zener, 15V, 300mW, SOD-323	NXP	BZX384-C15,115	Fitted
2	F1	Fuse Clip catridge, 250V, 10A, PCB	Littelfuse Inc	01000056Z	Fitted
1	F1	Fuse, Slow Blow, Ceramic, 250V, 5A	Bel Fuse Inc	5HT 5-R	Fitted
7	HS1, HS2, HS3, HS4, HS5, HS6, HS7	HEATSINK ALUM ANOD	Assmann WSW Components	V6560X	Fitted
1	J1	AC Receptacle, 10A 250VAC	Qualtek Electronics Corporation	703W-00/54	Fitted
1	J2	Header, 100mil, 5x1, TH	Sullins Connector Solutions	PREC005SAAN-RC	Fitted
1	J3	Conn Term Block, 2POS, 5.08mm, TH	On Shore Technology Inc	OSTTC022162	Fitted
1	L3	Inductor, PFC Boost, 1mH, 4A, PQ4040	Wurth Electronics Inc	750342669	Fitted
1	L2	Choke Common Mode, 17mH, 4A, 50mohm	Wurth Electronics Inc	7448030417	Fitted
2	L1, L4	Sheilded Drum Core Ferrite, 100uH, 2.5A, 0.1Ohm, SMD	Wurth Electronics Inc	7447709101	Fitted
1	L5	Inductor, Drum Core, Ferrite, 1uH, 21.8A, 0.002 ohm, TH	Coilcraft	PCV-0-102-25L	Fitted
1	Q1	MOSFET N-CH 500V 12A TO-220F	Alpha & Omega Semiconductor Inc	AOTF12T50P	Fitted
2	Q2, Q3	MOSFET N-CH 500V 18A TO-220F	Fairchild Semiconductor	FDPF18N50	Fitted
2	Q4, Q5	Transistor, NPN, 65V, 0.1A, SOT-23	ON Semiconductor	BC846BLT1G	Fitted
2	Q6, Q7	Transistor, PNP, 40V, 0.2A, SOT-23	Fairchild Semiconductor	MMBT3906LT1G	Fitted
1	Q8	Transistor, NPN, 800V, 1.5A, TO-126	Fairchild Semiconductor	KSC5026MOS	Fitted
1	Q9	MOSFET, N-CH, 60V, 0.17A, SOT-23	ON Semiconductor	2N7002ET1G	Fitted
1	R1	RES, 220 ohm, 5%, 1W, 2512	Vishay-Dale	CRCW2512220RJNEG	Fitted
1	R23	RES, 49.9 ohm, 1%, 0.1W, 0603	Yageo America	RC0603FR-0749R9L	Fitted
1	R2	RES, 2.54, 1%, 0.1 W, 0603	Yageo America	RC0603FR-072R54L	Fitted
6	R3, R6, R9, R49, R53, R57	RES, 3.32 M, 1%, 0.25 W, 1206,	Yageo America	RC1206FR-073M32L	Fitted
1	R4	RES, 0.05 ohm, 1%, 1 W, 2512	TT Electronics/Welwyn	LRMAM2512-R05FT4	Fitted

Copyright © 2015, Texas Instruments Incorporated

Table 9. BOM (continued)

QTY	REFERENCE	PART DESCRIPTION	MANUFACTURER	MANUFACTURER PART NUMBER	NOTE
4	R5, R12, R15, R19	RES, 21.5 k, 1%, 0.1 W, 0603	Yageo America	RC0603FR-0721K5L	Fitted
1	R7	RES, 226, 1%, 0.1 W, 0603	Yageo America	RC0603FR-07226RL	Fitted
1	R8	RES, 10, 1%, 0.1 W, 0603	Yageo America	RC0603FR-0710R0L	Fitted
1	R10	RES, 17.8k ohm, 1%, 0.1 W, 0603	Yageo America	RC0603FR-0717K8L	Fitted
1	R11	RES, 127k ohm, 1%, 0.1 W, 0603	Yageo America	RC0603FR-07127KL	Fitted
1	R13	RES, 3.32 ohm, 1%, 0.1W, 0603	Yageo America	RC0603FR-073R32L	Fitted
3	R14, R17, R54	RES, 5.11 ohm, 1%, 0.1W, 0603	Yageo America	RC0603FR-075R11L	Fitted
1	R16	RES, 1.20 ohm, 5%, 1 W, 2512	TE Connectivity	1-1622820-9	Fitted
2	R18, R20	RES, 0.02 ohm, 1%, 1 W, 2512	TT Electronics/Welwyn	LRMAM2512-R02FT4	Fitted
7	R21, R22, R37, R39, R45, R50, R56	RES, 10.0k ohm, 1%, 0.1W, 0603	Yageo America	RC0603FR-0710KL	Fitted
2	R24, R38	RES, 1.00k ohm, 1%, 0.1W, 0603	Yageo America	RC0603FR-071KL	Fitted
1	R25	RES SMD 0.0 ohm jumper, 0.1W	Samsung	RC1608J000CS	Fitted
1	R26	RES, 316k ohm, 1%, 0.25W, 1206	Yageo America	RC1206FR-07316KL	Fitted
1	R27	RES, 34.8k ohm, 1%, 0.1W, 0603	Yageo America	RC0603FR-0734K8L	Fitted
1	R28	RES, 100k ohm, 1%, 0.1W, 0603	Yageo America	RC0603FR-07100KL	Fitted
1	R29	RES, 2.67k ohm, 1%, 0.1W, 0603	Yageo America	RC0603FR-072K67L	Fitted
2	R30, R51	RES, 100 ohm, 1%, 0.1W, 0603	Yageo America	RC0603FR-07100RL	Fitted
2	R31, R35	RES, 51.1 ohm, 1%, 0.1W, 0603	Yageo America	RC0603FR-0751R1L	Fitted
1	R32	RES, 1.54k ohm, 1%, 0.1W, 0603	Yageo America	RC0603FR-071K54L	Fitted
3	R33, R34, R40	RES, 4.42k ohm, 1%, 0.1W, 0603	Yageo America	RC0603FR-074K42L	Fitted
1	R36	RES, 511 ohm, 1%, 0.1 W, 0603	Yageo America	RC0603FR-07511RL	Fitted
1	R41	RES, 13.7k ohm, 1%, 0.1W, 0603	Yageo America	RC0603FR-0713K7L	Fitted
1	R42	RES, 2.37k ohm, 1%, 0.1W, 0603	Yageo America	RC0603FR-072K37L	Fitted
1	R44	RES, 5.49k ohm, 1%, 0.1W, 0603	Yageo America	RC0603FR-075K49L	Fitted
1	R46	RES, 2.49k ohm, 1%, 0.1W, 0603	Yageo America	RC0603FR-072K49L	Fitted
2	R47, R55	RES, 15.4 ohm, 1%, 0.1W, 0603	Yageo America	RC0603FR-0715R4L	Fitted
1	R48	RES, 82k ohm, 5%, 0.25W, 1206	Yageo America	RC1206JR-0782KL	Fitted
1	R52	RES, 6.81k ohm, 1%, 0.1W, 0603	Yageo America	RC0603FR-076K81L	Fitted
1	R58	RES, 133k ohm, 1%, 0.1W, 0603	Yageo America	RC0603FR-07133KL	Fitted
1	R59	RES, 1.15k ohm, 1%, 0.1W, 0603	Yageo America	RC0603FR-071K15L	Fitted
1	R60	RES, 226k ohm, 1%, 0.1W, 0603	Yageo America	RC0603FR-07226KL	Fitted
1	R61	RES, 7.50 ohm, 1%, 0.25W, 1206	Yageo America	RC1206FR-077R5L	Fitted
1	R62	RES, 56.2k ohm, 1%, 0.1W, 0603	Yageo America	RC0603FR-0756K2L	Fitted

Copyright © 2015, Texas Instruments Incorporated

Table 9. BOM (continued)

QTY	REFERENCE	PART DESCRIPTION	MANUFACTURER	MANUFACTURER PART NUMBER	NOTE
1	RT1	NTC Thermistor, 5 ohm, 4A	Cantherm	MF72-005D11	Fitted
1	RV1	Varistor 275V RMS 10MM Radial, TH	Bourns Inc	MOV-10D431K	Fitted
1	T1	LLC Transformer, ETD44, 400uH, 75uH Leakage, 2.3A	Wurth Electronics Inc	750342670	Fitted
1	T2	Flyback Transformer, EE1304, 4mH, 100mA	Wurth Electronics Inc	750342671	Fitted
11	TP1, TP2, TP3, TP5, TP6, TP7, TP9, TP10, TP11, TP14, TP15	Test Point, Miniature, Red, TH	Keystone	5000	Fitted
4	TP4, TP8, TP12, TP13	Test Point, Miniature, Black, TH	Keystone	5001	Fitted
1	U1	8-PIN CCM PFC Controller	Texas Instruments	UCC28180D	Fitted
1	U2	IC, 24-V Input, 150 mA, Utralow IQ LDO Regulator	Texas Instruments	TLV70450DBV	Fitted
1	U3	High-Speed,4A, 600V High-side Low-side Gate Driver	Texas Instruments	UCC27714D	Fitted
1	U4	IC, Dual OpAmp With Internal Reference	Texas Instruments	TL103WAID	Fitted
1	U5	High-Performance Resonant Mode Controller	Texas Instruments	UCC25600D	Fitted
2	U6, U7	Opto-Isolator, 1 Channel, TH	Lite-On Inc	LTV-817A	Fitted
1	U8	Constant-Voltage, Constant-Current Controller With Primary-Side Regulation, BJT Drive	Texas Instruments	UCC28722DBV	Fitted

Copyright © 2015, Texas Instruments Incorporated

8.3 PCB Layout Recommendations

A careful PCB layout is critical for proper operation of power electronics devices. As with all switching power supplies, attention to detail in the layout can save much time in troubleshooting later on.

8.3.1 Power Stage Specific Guidelines

Key guidelines for routing power stage components:

- Minimize the loop area and trace length of the power path circuits, which contain high frequency switching currents, on both the primary and secondary sides of the converter. This will help reduce EMI and improve converter overall performance.
- Keep traces with high dV/dt potential and high di/dt capability away from or shielded from sensitive signal traces.
- Keep power ground and control ground separately for each power supply stage. If they are electronically connected, tie them together in one point near DC input return or output return of the given stage correspondingly.
- When multiple capacitors are used in parallel for current sharing, layout should be symmetrical across both leads of the capacitors. If the layout is not identical, the capacitor with the lower series trace impedance will see higher peak currents and become hotter (i^2R).
- Tie the heat-sinks of all the power switching components to their respective power grounds.
- Place protection devices such as TVS, snubbers, capacitors, or diodes physically close to the device they are intended to protect, and routed with short traces to reduce inductance.
- Choose the width of PCB traces based on acceptable temperature rise at the rated current per IPC2152 as well as acceptable DC and AC impedances. Also, the traces should withstand the fault currents (such as short circuit current) before the activation of electronic protection such as fuse or circuit breaker.
- Determine the distances between various circuits according to the requirements of applicable standards, such as UL60950.
- Adapt thermal management to fit the end-equipment requirements.

8.3.2 Controller Specific Guidelines

Key guidelines for routing of controller components and signal circuits:

- The optimum placement of decoupling capacitor is closest to the VCC and GND terminals of the device. Care must be taken to minimize the loop area formed by the bypass-capacitor connection and the GND terminal of the IC.
- The reference ground for the device, a low current signal ground (SGND), should be a copper plane or island.
- Locate all controller support components at specific signal pins (VSENSE, VCOMP, ISENSE, ICOMP, FREQ) close to their connection pin. Connect the other end of the component to the SGND with shortest trace length.
- The trace routing for the voltage sensing and current sensing circuit components to the device should be as short as possible to reduce parasitic effects on the current limit and current/voltage monitoring accuracy. These traces should not have any coupling to switching signals on the board.
- The SGND plane must be connected to high current ground (main power ground) at a single point that is at the negative terminal of DC input or output capacitor respectively.

Copyright © 2015, Texas Instruments Incorporated

8.3.3 Layer Plots

To download the most recent layer plots, see the design files at TIDA-00355.

NOTE: The components R63, R64, and C54 shown in the schematics are added during the testing and validation phase and are not part of this layout.

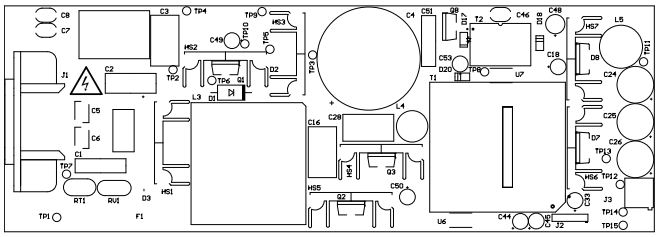

Figure 30. Top Overlay

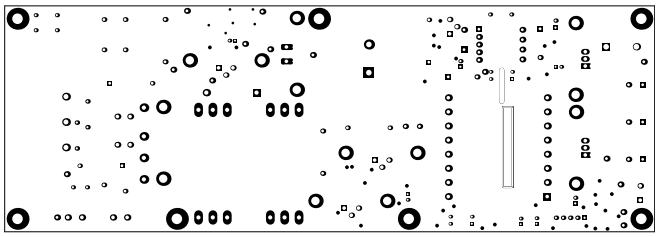

Figure 31. Top Solder Mask

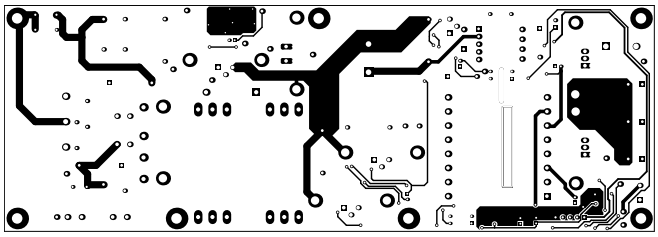

Figure 32. Top Layer

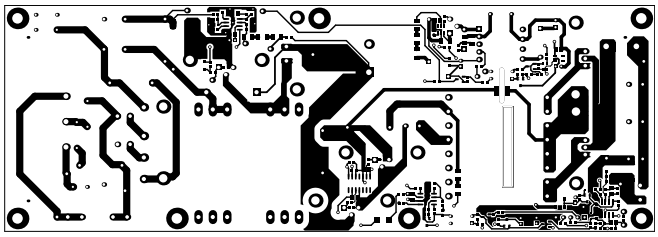

Figure 33. Bottom Layer

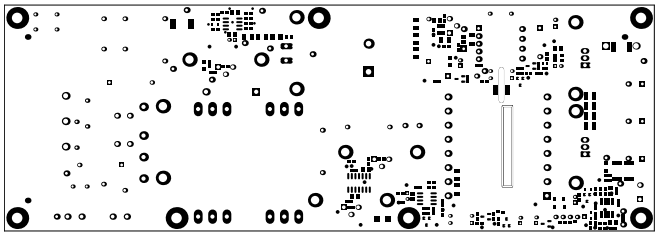

Figure 34. Bottom Solder Mask

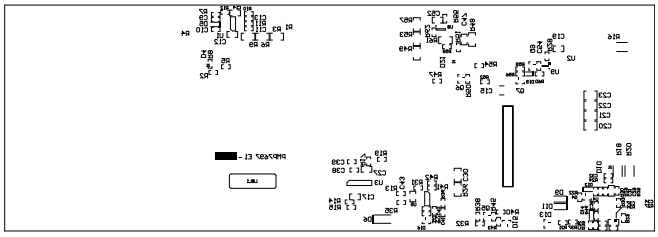

Figure 35. Bottom Overlay

Symbol	Hit Count	Tool Size	Physical Length	Rout Path Length	Plated	Hole Type
□	48	15.685mil (0.5mm)			PTH	Round
○	47	28mil (0.71mm)			PTH	Round
Y	31	31.496mil (0.8mm)			PTH	Round
✱	56	39.37mil (1mm)			PTH	Round
⊕	46	51.181mil (1.3mm)			PTH	Round
◇	18	59.055mil (1.5mm)			PTH	Round
⊠	3	70.866mil (1.8mm)			PTH	Round
□	4	78.74mil (2mm)			PTH	Round
○	14	118.11mil (3mm)			PTH	Round
⊠	2	137.795mil (3.5mm)			NPTH	Round
⊕	7	147.638mil (3.75mm)			PTH	Round
✱	2	19.685mil (0.5mm)	141.732mil (3.6mm)	122.047mil (3.1mm)	PTH	Slot
X	2	19.685mil (0.5mm)	1127.795mil (28.9mm)	1118.11mil (28.4mm)	PTH	Slot
Y	1	70.866mil (1.8mm)	500mil (12.7mm)	429.134mil (10.9mm)	PTH	Slot
	281	Total				

Slot definitions : Rout Path Length = Calculated from tool start centre position to tool end centre position.
Physical Length = Rout Path Length + Tool Size = Slot length as defined in the PCB layout

Drill Table

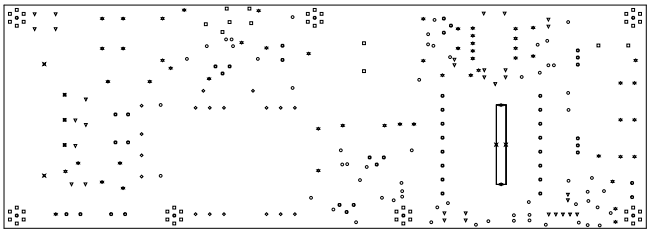

Figure 36. Drill Drawing

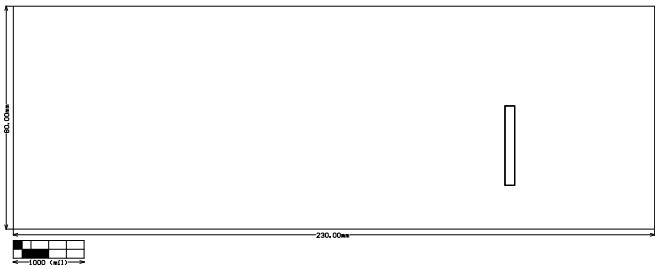

Figure 37. Board Dimensions

Copyright © 2015, Texas Instruments Incorporated

8.4 Altium Project

To download the most recent Altium project files, see the design files at TIDA-00355.

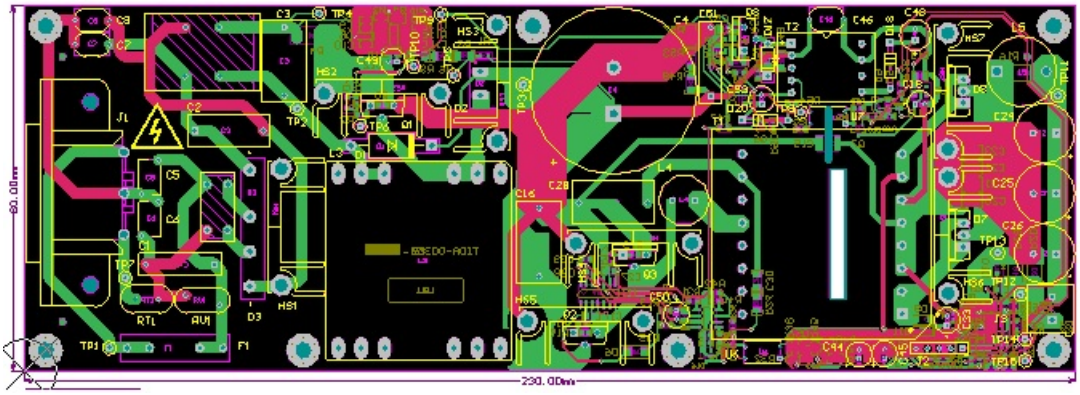

Figure 38. Top and Bottom Layer Altium Image

Copyright © 2015, Texas Instruments Incorporated

8.5 Gerber Files

To download the most recent Gerber files, see the design files at TIDA-00355.

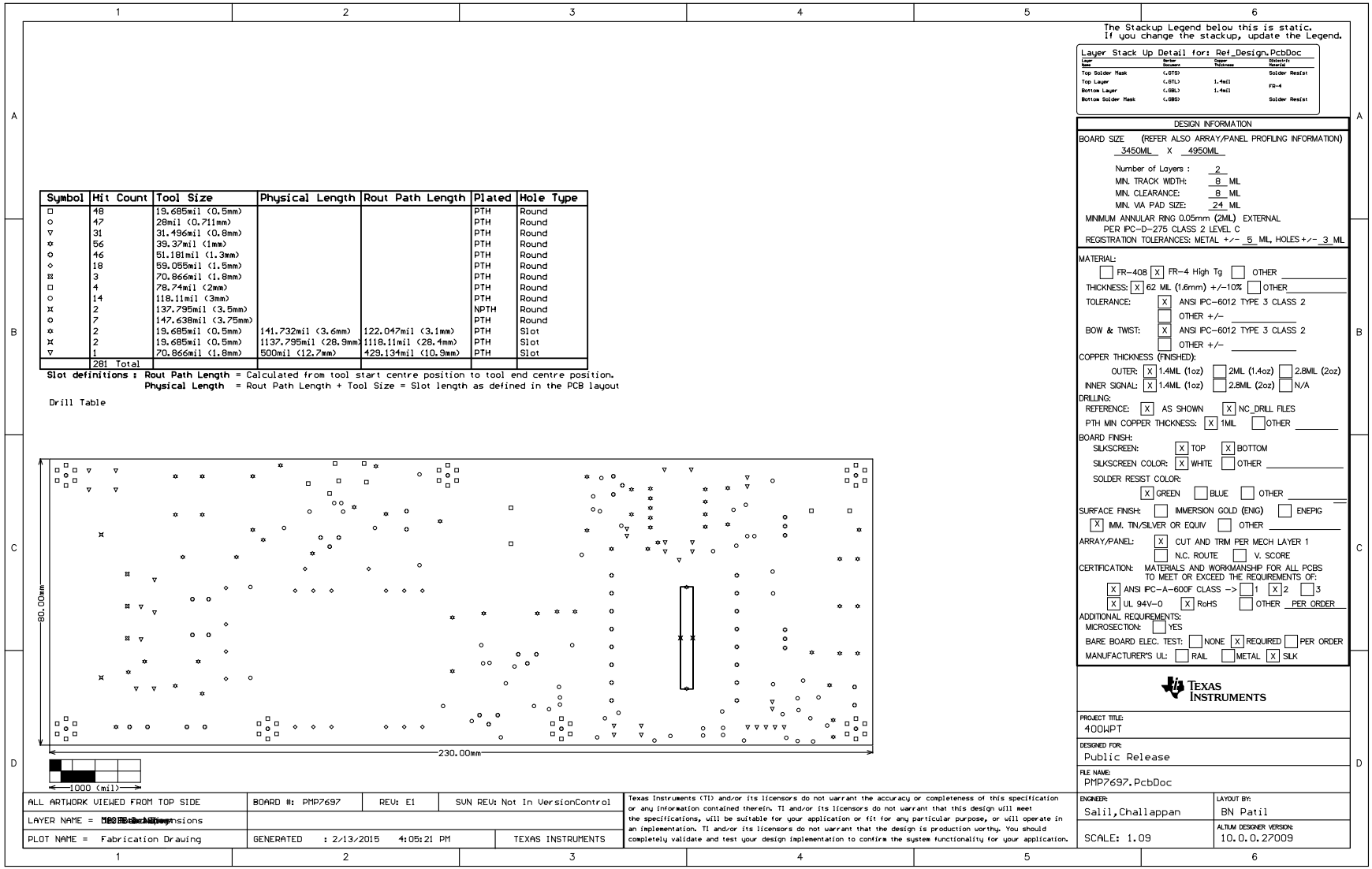

Figure 39. Fabrication Drawing

Copyright © 2015, Texas Instruments Incorporated

8.6 Assembly Drawings

To download the most recent assembly drawings, see the design files at TIDA-00355.

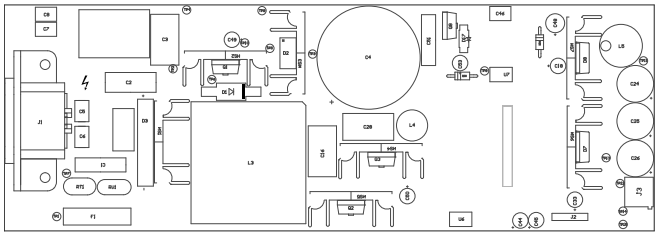

Figure 40. Top Assembly Drawing

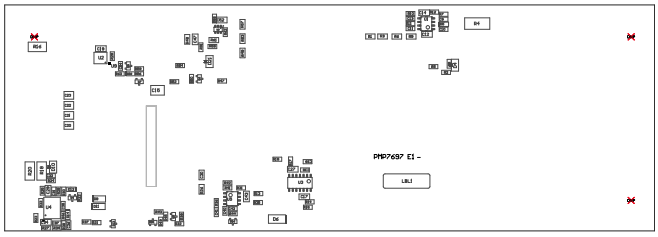

Figure 41. Bottom Assembly Drawing

Copyright © 2015, Texas Instruments Incorporated

9 References

1. Texas Instruments, *Designing an LLC Resonant Half-Bridge Power Converter*, Power Supply Design Seminar: SEM1900, Topic 3 (SLUP263)
2. Texas Instruments, *Feedback Loop Design of an LLC Resonant Power Converter*, Application Report (SLUA582)
3. Texas Instruments, *A Design Review of a Full-Featured 350-W Offline Power Converter*, SEM2000, Topic 2, (TIDU186)
4. Texas Instruments, *Exposing the Inner Behavior of a Quasi-Resonant Flyback Converter*, SEM2000, Topic 3 (SLUP302)
5. Texas Instrument, *Snubber Circuits: Theory, Design and Applications* (SLUP100)
6. Texas Instruments, *UCC28722/UCC28720 5W USB BJT Flyback Design Example*, Application Report (SLUA700)
7. S. Y. R. Hui and H. Chung, *Resonant and Soft-Switching Converters*, In: M. H. Rashid, Ed., Power Electronics Handbook, Academic Press, Cambridge, 2000, pp. 271 – 304.

10 About the Author

SALIL CHELLAPPAN is a lead engineer, member, and group technical staff at Texas Instruments, where he is responsible for developing customized power solutions as part of the Power Design Services group. Salil brings to this role his extensive experience in power electronics, power conversion, EMI/EMC, power and signal integrity, and analog circuits design spanning many high-profile organizations. Salil holds a bachelor of technology degree from the University of Kerala.

LATIF AMEER BABU is a systems engineer at Texas Instruments, where he is responsible for developing reference design solutions for the industrial segment. Latif brings to this role his extensive experience in power electronics, high-frequency DC-DC converter, and analog circuit design. Latif earned his master of technology in power electronics and power systems from Indian Institute of Technology, Mumbai; IN. Latif is a member of the Institute of Electrical and Electronics Engineers (IEEE).

Copyright © 2015, Texas Instruments Incorporated

Revision History A

Changes from Original (March 2015) to A Revision	Page
• Changed schematic files to the most recent versions.	37
• Changed bill of materials to the most recent version.	40

NOTE: Page numbers for previous revisions may differ from page numbers in the current version.

Copyright © 2015, Texas Instruments Incorporated

IMPORTANT NOTICE FOR TI REFERENCE DESIGNS

Texas Instruments Incorporated ("TI") reference designs are solely intended to assist designers (“Buyers”) who are developing systems that incorporate TI semiconductor products (also referred to herein as “components”). Buyer understands and agrees that Buyer remains responsible for using its independent analysis, evaluation and judgment in designing Buyer’s systems and products.

TI reference designs have been created using standard laboratory conditions and engineering practices. **TI has not conducted any testing other than that specifically described in the published documentation for a particular reference design.** TI may make corrections, enhancements, improvements and other changes to its reference designs.

Buyers are authorized to use TI reference designs with the TI component(s) identified in each particular reference design and to modify the reference design in the development of their end products. HOWEVER, NO OTHER LICENSE, EXPRESS OR IMPLIED, BY ESTOPPEL OR OTHERWISE TO ANY OTHER TI INTELLECTUAL PROPERTY RIGHT, AND NO LICENSE TO ANY THIRD PARTY TECHNOLOGY OR INTELLECTUAL PROPERTY RIGHT, IS GRANTED HEREIN, including but not limited to any patent right, copyright, mask work right, or other intellectual property right relating to any combination, machine, or process in which TI components or services are used. Information published by TI regarding third-party products or services does not constitute a license to use such products or services, or a warranty or endorsement thereof. Use of such information may require a license from a third party under the patents or other intellectual property of the third party, or a license from TI under the patents or other intellectual property of TI.

TI REFERENCE DESIGNS ARE PROVIDED "AS IS". TI MAKES NO WARRANTIES OR REPRESENTATIONS WITH REGARD TO THE REFERENCE DESIGNS OR USE OF THE REFERENCE DESIGNS, EXPRESS, IMPLIED OR STATUTORY, INCLUDING ACCURACY OR COMPLETENESS. TI DISCLAIMS ANY WARRANTY OF TITLE AND ANY IMPLIED WARRANTIES OF MERCHANTABILITY, FITNESS FOR A PARTICULAR PURPOSE, QUIET ENJOYMENT, QUIET POSSESSION, AND NON-INFRINGEMENT OF ANY THIRD PARTY INTELLECTUAL PROPERTY RIGHTS WITH REGARD TO TI REFERENCE DESIGNS OR USE THEREOF. TI SHALL NOT BE LIABLE FOR AND SHALL NOT DEFEND OR INDEMNIFY BUYERS AGAINST ANY THIRD PARTY INFRINGEMENT CLAIM THAT RELATES TO OR IS BASED ON A COMBINATION OF COMPONENTS PROVIDED IN A TI REFERENCE DESIGN. IN NO EVENT SHALL TI BE LIABLE FOR ANY ACTUAL, SPECIAL, INCIDENTAL, CONSEQUENTIAL OR INDIRECT DAMAGES, HOWEVER CAUSED, ON ANY THEORY OF LIABILITY AND WHETHER OR NOT TI HAS BEEN ADVISED OF THE POSSIBILITY OF SUCH DAMAGES, ARISING IN ANY WAY OUT OF TI REFERENCE DESIGNS OR BUYER’S USE OF TI REFERENCE DESIGNS.

TI reserves the right to make corrections, enhancements, improvements and other changes to its semiconductor products and services per JESD46, latest issue, and to discontinue any product or service per JESD48, latest issue. Buyers should obtain the latest relevant information before placing orders and should verify that such information is current and complete. All semiconductor products are sold subject to TI’s terms and conditions of sale supplied at the time of order acknowledgment.

TI warrants performance of its components to the specifications applicable at the time of sale, in accordance with the warranty in TI’s terms and conditions of sale of semiconductor products. Testing and other quality control techniques for TI components are used to the extent TI deems necessary to support this warranty. Except where mandated by applicable law, testing of all parameters of each component is not necessarily performed.

TI assumes no liability for applications assistance or the design of Buyers’ products. Buyers are responsible for their products and applications using TI components. To minimize the risks associated with Buyers’ products and applications, Buyers should provide adequate design and operating safeguards.

Reproduction of significant portions of TI information in TI data books, data sheets or reference designs is permissible only if reproduction is without alteration and is accompanied by all associated warranties, conditions, limitations, and notices. TI is not responsible or liable for such altered documentation. Information of third parties may be subject to additional restrictions.

Buyer acknowledges and agrees that it is solely responsible for compliance with all legal, regulatory and safety-related requirements concerning its products, and any use of TI components in its applications, notwithstanding any applications-related information or support that may be provided by TI. Buyer represents and agrees that it has all the necessary expertise to create and implement safeguards that anticipate dangerous failures, monitor failures and their consequences, lessen the likelihood of dangerous failures and take appropriate remedial actions. Buyer will fully indemnify TI and its representatives against any damages arising out of the use of any TI components in Buyer’s safety-critical applications.

In some cases, TI components may be promoted specifically to facilitate safety-related applications. With such components, TI’s goal is to help enable customers to design and create their own end-product solutions that meet applicable functional safety standards and requirements. Nonetheless, such components are subject to these terms.

No TI components are authorized for use in FDA Class III (or similar life-critical medical equipment) unless authorized officers of the parties have executed an agreement specifically governing such use.

Only those TI components that TI has specifically designated as military grade or “enhanced plastic” are designed and intended for use in military/aerospace applications or environments. Buyer acknowledges and agrees that any military or aerospace use of TI components that have ***not*** been so designated is solely at Buyer's risk, and Buyer is solely responsible for compliance with all legal and regulatory requirements in connection with such use.

TI has specifically designated certain components as meeting ISO/TS16949 requirements, mainly for automotive use. In any case of use of non-designated products, TI will not be responsible for any failure to meet ISO/TS16949.

Mailing Address: Texas Instruments, Post Office Box 655303, Dallas, Texas 75265
Copyright © 2015, Texas Instruments Incorporated